NOTE: A three-minute maximum time limit will be imposed on all comments from the public, regardless of the subject matter. A request form is available from the Deputy Town Clerk; fill it in and return it to her prior to the start of the meeting. When you speak, you must come to the podium in the front and clearly state your name and address for the record. Please turn off or mute your cell phone or pager

TOWN OF BAY HARBOR ISLANDS
QUASI-JUDICIAL PUBLIC HEARING
AGENDA
June 13, 2016

AGENDA

CALL TO ORDER: 7:00 p.m.
PLEDGE OF ALLEGIANCE:
ROLL CALL

1. **Public Hearing** for the purpose of hearing any public comment with respect to an application for variance from Section 23-12(6)(a)(iii) of the Town Code to allow a boat dock to extend 35 feet out from the seawall cap and then run parallel to the seawall for the property located at 10200 West Broadview Drive, lot 42 & N 1/2 of lot 43, Block 23, Bay Harbor Islands, Florida. This application for variance is requested by property owners Mark Tabacinic & Vanessa Bibliowicz. Enclosed is a copy of the letter of hardship, the application, plans, and a memorandum from Town Planner Miller.

2. **Approval or denial** of the above variance request: As required by Sec. 2-22 of the Town Code, the Town Council shall determine whether to grant or deny the application for variance. An affirmative vote of five Council Members is necessary in order to grant the request. The decision of the Town Council is final. If the request is granted, the decision of the Town Council shall be recorded in a resolution to be prepared by the Town Attorney. It should be noted that any approval of the Town Council is subject to other requirements of the Town Code, County Code, Florida Building Code, FEMA, etc.

   STAFF RECOMMENDATION: Approval

CONCLUSION OF PUBLIC HEARING - Approximately 7:15 p.m.

Pursuant to Florida Statutes 286.0105, the Town hereby advises the public that should any person decide to appeal any decision of the Town Council with respect to any matter to be considered at this meeting or hearing, he or she will need a record of the proceedings, and that, for such purpose he or she may need to ensure that a verbatim record of the proceedings is made, which record includes the testimony and evidence upon which the appeal is to be based.

AGENDA ITEM REPORT
June 13, 2016

ITEM NUMBER: 1.

ITEM: Public Hearing for the purpose of hearing any public comment with respect to an application for variance from Section 23-12(6)(a)(iii) of the Town Code to allow a boat dock to extend 35 feet out from the seawall cap and then run parallel to the seawall for the property located at 10200 West Broadview Drive, lot 42 & N 1/2 of lot 43, Block 23, Bay Harbor Islands, Florida. This application for variance is requested by property owners Mark Tabacinic & Vanessa Bibliowicz. Enclosed is a copy of the letter of hardship, the application, plans, and a memorandum from Town Planner Miller.

DESCRIPTION:
The variance requested is as followed:

* Variance from Section 23-12(6)(a)(iii) limits docks from extending more than 25 feet beyond the outside face of the seawall cap.

RECOMMENDED ACTION:

FINANCIAL ANALYSIS:

BUDGET IMPACT:

Submitted By: Alba Chang, Deputy Town Clerk

ATTACHMENTS

1.	Variance Application	10200 w broadview dr- variance app.pdf
2.	Staff report - MM	Staff report - variance.pdf

TOWN OF BAY HARBOR ISLANDS
MIAMI-DADE COUNTY, FL
RECEIVED
MAY 20 2016
By

APPLICATION FOR VARIANCE AND PUBLIC HEARING

DATE:	PROPERTY ADDRESS: 10200 W Broadview Drive	
LEGAL DESCRIPTION	LOT: 42 & N	BLOCK: 23
SUBDIVISION:	**TOWN OF BAY HARBOR ISLANDS**	

APPLICANT'S NAME:		
ADDRESS:		
BUSINESS PHONE:	RESIDENCE PHONE:	CELL PHONE:

PROPERTY OWNER'S NAME: (If different from applicant)	MARK TABACINIC & VANESSA BIBLOWICZ	
ADDRESS:	10200 W. BROADVIEW DRIVE	
BUSINESS PHONE:	RESIDENCE PHONE: (305) 921-9314	CELL PHONE:

NAME OF CONTRACTOR and/or ARCHITECT:	Southeast Marine Construction	
COMPANY NAME:	Douglas MacDonald	
ADDRESS:		
BUSINESS PHONE:	RESIDENCE PHONE: (954) 630-2300	CELL PHONE:

PRESENT ZONING CLASSIFICATION:

- ☐ BAA - Business District
- ☐ RBA - Tract
- ☐ RD - Single Family
- ☐ PRD - Planned Residential Development
- ☐ CA - Causeway
- ☐ RE - Multiple Family
- ☐ PUD - Planned Unit Development

IF APPLICANT IS THE PROPERTY OWNER, INDICATE DATE ACQUIRED: ____/____/____

IF APPLICANT IS THE LESSEE, INDICATE LEASE DATE: ____/____/____

INDICATE TERMS OF LEASE:	

LEGAL DESCRIPTION OF ANY CONTIGUOUS PROPERTY OWNED BY THE APPLICANT:

LOT:	BLOCK:	SUBDIVISION:

IS THERE AN OPTION TO PURCHASE OR LEASE THE SUBJECT PROPERTY? ☐ Yes ☐ No

IS IT PREDICATED ON APPROVAL OF APPLICATION? ☐ Yes ☐ No

IS HEARING BEING REQUESTED AS A RESULT OF A VIOLATION NOTICE? ☐ Yes ☐ No

HAS A PUBLIC HEARING PREVIOUSLY BEEN HELD REGARDING THIS PROPERTY? ☐ Yes ☐ No
IF YES DATE:_____ DECISION:_____

ARE THERE ANY EXISTING STRUCTURES ON THE PROPERTY TO BE DEMOLISHED? ☐ Yes ☐ No
DESCRIBE:_____

BRIEFLY STATE REQUEST:	

THE FOLLOWING ARE TO BE NOTIFIED OF HEARING DATE, AS MY REPRESENTATIVE(S):
(Please provide this information, or they will NOT be notified)

NAME	ADDRESS	PHONE

Applicant Signature(s) _____ Date 05/18/16

Vanessa Bilelis Date 05/18/16

_____ Date / /

ALL INFORMATION SUBMITTED IN CONNECTION WITH THIS APPLICATION BECOMES A PERMANENT PART OF THE PUBLIC RECORDS OF THE TOWN OF BAY HARBOR ISLANDS.

(FOR OFFICE USE ONLY)

APPROVED: ☐ YES ☐ NO
DATE APPROVED: / /
CODE SECTION: _____

REQUEST FOR VARIANCE
OWNER AFFIDAVIT

DATE: _____

The subject property is legally described as:

LOT: 42 & N	BLOCK: 23	SUBDIVISION: BAY HARBOR ISLANDS
ADDRESS:	10203 West Broadview Drive	

I (we), _____, being first duly sworn, depose and say that I am (we are) the owner(s) of the property described and which is the subject matter of the proposed hearing; that all the answers to the questions in this application and all supplemental data attached to and made a part of the application are honest and true to the best of my knowledge and belief.

I (we) hereby authorize the Town of Bay Harbor Islands to enter the subject property for the sole purpose of posting a NOTICE OF PUBLIC HEARING on the property as required by the Town Council, and do take the responsibility of removing this notice after the date of the hearing.

_____
Signature of Owner

Before me this day personally appeared
Mark Tabacinic
known to me to be the person described in and who executed the foregoing instrument, and acknowledged to and before me that affidavit executed this document for the purposes therein expressed.

Sworn to and subscribed to before me this 20th day of May, 20 16.

_____
Notary Public

My commission expires: Sept. 30, 2016 Personally known ✓ Produced I.D. _____
Type/number of I.D.

____ DID TAKE an oath, or
✓ DID NOT take an oath

MONICA PEÑA
MY COMMISSION # EE839362
EXPIRES September 30, 2016
(407) 398-0153 FloridaNotaryService.com

Vanessa Bibliwicz
Signature of Co-owner

Before me this day personally appeared
Vanessa Bibliwicz.
known to me to be the person described in and who executed the foregoing instrument, and acknowledged to and before me that affidavit executed this document for the purposes therein expressed.

Sworn to and subscribed to before me this day of May, 20 16.

_____
Notary Public

My commission expires: Sept. 30, 2016 Personally known ✓ Produced I.D. _____
Type/number of I.D.

____ DID TAKE an oath, or
✓ DID NOT take an oath

c:\all\pa\forms\variance.aff

MONICA PEÑA
MY COMMISSION # EE839362
EXPIRES September 30, 2016
(407) 398-0153 FloridaNotaryService.com

Town of Bay Harbor Islands
P.O. Box 546620
Bay Harbor Islands, FL 33154

Payee: MARK TABACINIC
Date: 5/23/2016 Time: 9:32 AM
Receipt Number: MAIN / 94547
Clerk: ALBA

VARIANCE - 10200 W. BROADVIEW DRIVE

ITEM	REFERENCE	AMOUNT
MISC	VARIANCE	525.00
	Total:	525.00
	Check 1727	525.00
	Change:	0.00

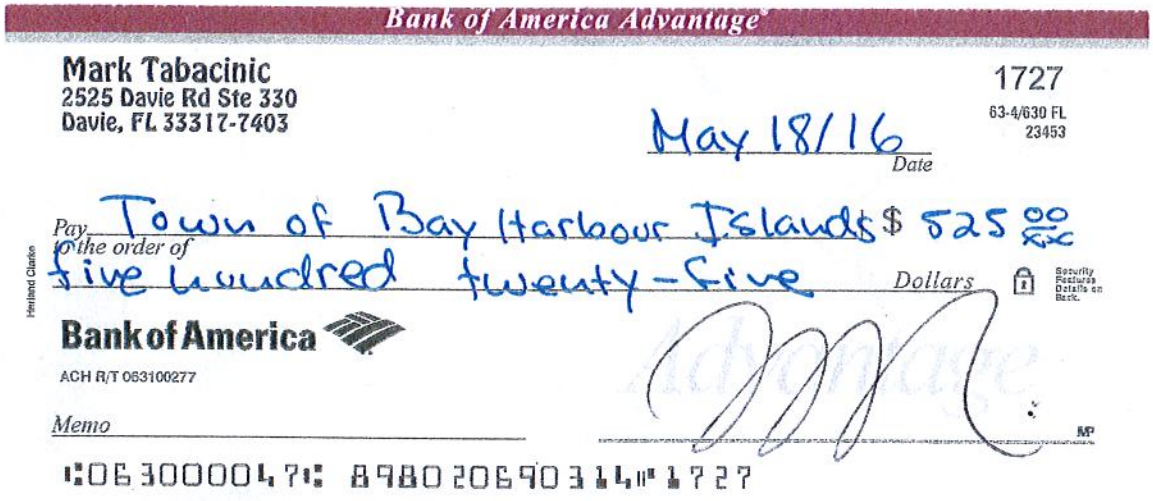

OCEAN CONSULTING, LLC · 340 Minorca Avenue, Suite 7 · Coral Gables, FL 33134
Tel: 305-921-9344 · Fax: 305-677-3254
www.oceanconsultingfl.com

14-4650

May 18, 2016

Town of Bay Harbor Islands
TOWN COUNCIL
9665 Bay Harbor Terrace
Bay Harbor Islands, FL 33154

RE: HARDSHIP LETTER FOR DOCK VARIANCE AT 10200 W. BROADVIEW DRIVE, IN THE TOWN OF BAY HARBOR ISLANDS, MIAMI- DADE COUNTY, FLORIDA

To Whom It May Concern:

On behalf of the applicant, Mr. Mark Tabacinic, this hardship letter is prepared to respectfully request a dock variance for the installation of a new 35-foot, L-shaped, wood dock at 10200 W. Broadview Drive, in the Town of Bay Harbor Islands, Miami-Dade County, Florida. The dock extension is required by the Miami-Dade County Department of Environmental Resources Management (DERM).

PURPOSE OF VARIANCE REQUEST

Per Section 23-12(6)(a)(iii) in the Town of Bay Harbor Islands Code, docks may not extend more than 25 feet beyond the seawall cap. Please see attached plans for reference. The proposed dock extends a maximum of 35 feet from the edge of the seawall cap.

BACKGROUND

The property owner has submitted a Town of Bay Harbor Islands building application to request the installation of a dock approximately 35 feet water-ward from the wet-face of the existing concrete seawall cap. The dock is required by Miami-Dade County's Department of Environmental Resource Management to extend a minimum of 35' offshore due to shallow water depths and sparse seagrass coverage within the project footprint.

MIAMI-DADE COUNTY PROCESS

Note again that Miami-Dade County DERM is requiring the extension of the dock a minimum of 35 feet from the wet-face of the existing seawall cap to obtain adequate water depth and to avoid seagrass resources. See attached recommendation letter from Miami-Dade County, requiring the proposed footprint.

Thank you for your review of this information. We look forward to working with the Board on this application for variance. Should you have any questions or require additional information, please do not hesitate to contact me at (305) 921-9344.

Sincerely,
OCEAN CONSULTING, LLC

Kirk Lofgren
Principal

MIAMI-DADE COUNTY
Carlos A. Gimenez, Mayor

Department of Regulatory and Economic Resources
Environmental Resources Management
701 NW 1st Court, 6th Floor
Miami, Florida 33136-3912
T 305-372-6567 F 305-372-6407
miamidade.gov

May 17, 2016

Mark Tabacinic
10200 W. Broadview Drive
Bay Harbor Islands, FL 33154

Re: Class I Permit Application CLI-2015-0023: Tabacinic – Seawall cap, batter piles, footer, and dock - located at 10200 W. Broadview Drive, Bay Harbor Islands, Miami-Dade County, Florida. (Folio 13-2227-001-4290)

Dear Mr. Tabacinic,

During the biological assessment DERM staff documented shallow water depths at the above referenced property. In order to obtain the minimum Miami-Dade County Code required water depth for the vessel intended to be moored on-site, DERM recommends the waterward edge of the proposed dock extend a minimum of 35 feet waterward from the face of the new seawall cap. DERM has no objection to the proposed structures as depicted on plans signed and sealed on February 25, 2016 and preliminary approved on February 29, 2016 (See Attachment A).

If you have any questions concerning the above referenced application, please contact me at (305) 372-6720 or metcam@miamidade.gov.

Sincerely,

Michelle Metcalf

Michelle Metcalf, Biologist I
Coastal and Wetlands Resources Section
Division of Environmental Resource Management

cc: Ocean Consulting, LLC. – Authorized Permit Agent (kirk@oceanconsultingfl.com)

Delivering Excellence Every Day

September 22, 2015

Mr. Mark Tabacinic
10200 West Broadview Drive
Bay Harbor Islands, Florida 33160

Re: Addendum No. 1 to Geotechnical Engineering Exploration Study
Tabacinic Residence – 10200 West Broadview Drive
Bay Harbor Islands, Florida
NV5 Project No. 146710

Dear Mr. Tabacinic,

NV5, Inc., previously KACO submits this addendum to our July 6, 2015 report titled Report of Subsurface Exploration and Geotechnical Engineering. Subsequent to the submittal of our geotechnical report we were informed by members of the project team that pin piles or helical piles are required due to access limitations to a crane for augercast piles. The following paragraphs describe the recommended pin piles and helical piles at this project site.

PIN PILES

Pin piles are driven steel cased pipes with a single rebar grouted inside the casing. The pile carries vertical load from the pile cap down to the bearing rock stratum. The small diameter of the pile allows for the use of percussion drilling tools that can drive the pile through the silt and sand layers. The following table details the recommended pin pile.

TABLE 1 - SUMMARY OF PIN PILE DESIGN RESISTANCE

Pin Pile Diameter	3-inch (nominal)
Design Compression Resistance	5-Tons
Design Tension Resistance	0-Tons
Design Lateral Resistance	0-Tons
Approx. Toe Elevation	Elev. -15 Feet NGVD
Minimum Pile Spacing	12-inches on center
Reinforcement	1 #5 full length
Minimum Grout Strength	3,000 psi in 28 days

1. Install 3-inch nominal diameter I.D. schedule 40 galvanized steel pin piles at locations specified by the Structural Engineer with a design resistance of 5-tons per pile.

2. The steel pipes shall be supplied and driven in sections with either threads at both ends and connected with standard couplings, or welded to sleeve sections. The tip of the piles shall have a threaded or welded end cap.

3. The piles should be installed using, as a minimum, an air hammer (minimum 135#) until the pile has reached the anticipated depth and the rate of penetration is less than 1/2-inch for 2 minutes. Final decision regarding pile length and driving criteria shall be made by the geotechnical engineer based on the driving behavior of the pile and the soil conditions encountered at each location. After pile approval, the contractor shall cut off the pile to the required elevation.

4. The pile shall be filled with a grout mixture with a minimum compressive strength of 3,000 pounds per square inch (psi) in 28 days. The grout shall be pumped using a tremie pipe placed at the toe of the pile. As an alternative, the pipe can be cleaned using compressed air through a hose advanced to the toe of the pile just prior to grouting from the top. To confirm compressive strength, the grout shall be tested in accordance with ASTM C-109 for each day of grouting. The grout shall be held in the mixer for a period not to exceed 90 minutes or as instructed by the Geotechnical Engineer. The contractor shall make every effort to fill the piles with the grout so that any trapped air during grout placement is eliminated. In the event the contractor elects to use a bagged grout, compressive strength data and mixing procedures must be submitted for approval.

5. One #5 bar shall then be placed in the center of the pile for the full length of pile, while the grout is still fluid. Pile head attachments should be as specified by the Engineer of Record. However, as a minimum, the attachment should consist of a 6-inch x 6-inch x ½-inch steel plate with a hole in the center and welded to the top of the pile. As an alternative, the steel plate can be welded to a sleeved pipe and later placed on top of the pile.

HELICAL PILES

1. As an alternative, the structural loads can also be supported on helical piles (such as A.B. Chance Helical Piles, Model RS3500.300 round shaft or equivalent) founded into the limestone. Our recommendations for helical piles are presented below.

TABLE 2 - SUMMARY OF HELICAL PILE DESIGN RESISTANCE

Example Pile Helix Configuration	10"/12"
Allowable Compression Resistance (tons)	10
Allowable Tension Resistance (tons)	4
Allowable Lateral Resistance for Vertical Piles (tons)	0
Estimated Minimum Pile Tip Elevation (ft., NGVD)	-15

Notes:

1. *Estimated pile tip based on existing ground surface elevation of +5 feet NGVD at the time of boring performance*
2. *Piles to be firmly screwed down to the top of the limestone layer*

2. The specialty contractor should provide a pile design that is signed and sealed by a Florida registered professional engineer design for NV5 review and approval.

3. We estimate total settlement of the helical pile foundation system will be on the order of 1-inch. If helical piles are to be used in tension, the design should account for the elongation of the pile. Alternatively, post tensioning of the pile can be considered to remove some of the potential elongation from the pile.

4. Vertical helix spacing should be a minimum of three times the upper helix diameter per A.B. Chance recommendations. Center-to-center spacing of the helical piles should be at least three times the diameter of the largest helix.

5. The final helical selection and design should consider corrosion potential. The Contractor should submit the pile design for review by NV5 and project structural engineers. The design should be signed and sealed by a Professional Engineer.

6. The piles shall be installed within 2-inches of the specified plan location and piles shall be installed within 2 percent of vertical.

7. The pile length provided is the minimum length estimated based on the boring information. The contractor should be aware that pile lengths may vary depending on actual site conditions. NV5 should observe pile installation to approve the final pile lengths. The pile contractor should note that very hard rock could be encountered during pile installation and should mobilize the appropriate equipment to achieve the minimum pile length. Such equipment could include special cutting teeth to advance the helix to the desired depth.

8. Measurement of installation torque can provide an indication of capacity. A calibrated gauge should be used during pile installation. We recommend the

contractor provide the torque requirements based on the specific anchor design to meet the recommended pile capacities.

We appreciate the opportunity to provide specialized engineering services on this project and look forward to an opportunity to participate in construction related aspects of the development. If you have questions about information contained in this report contact the writer at 305.901-2151.

Sincerely,
NV5, Inc.

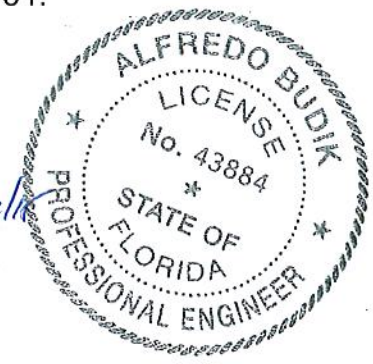

Alfredo Budik, P.E.
Senior Engineer
Florida License No. 43884

Distribution: Original and 2 Copies to Addressee via U.S. Mail
Copy to Addressee via email

y:\doc\nv5 reports\146710_Mr. Mark Tabacinic - Addendum for Pin Piles and Helical Piles to geo_rpt_10200 West Broadview Drive, Bay Harbor Islands_09-22-15.doc

Client: ocean
Site: 10200 W Broad View

Ref: franco
Page: 1
Date: 2.25.16

Sheet: batters
Pressure: Rankine
Toe: Fixed Earth Support

Maximum	d (ft)
□ 2439.4 ftlb/ft	6.22
◇ 1063.9 lb/ft	10.19

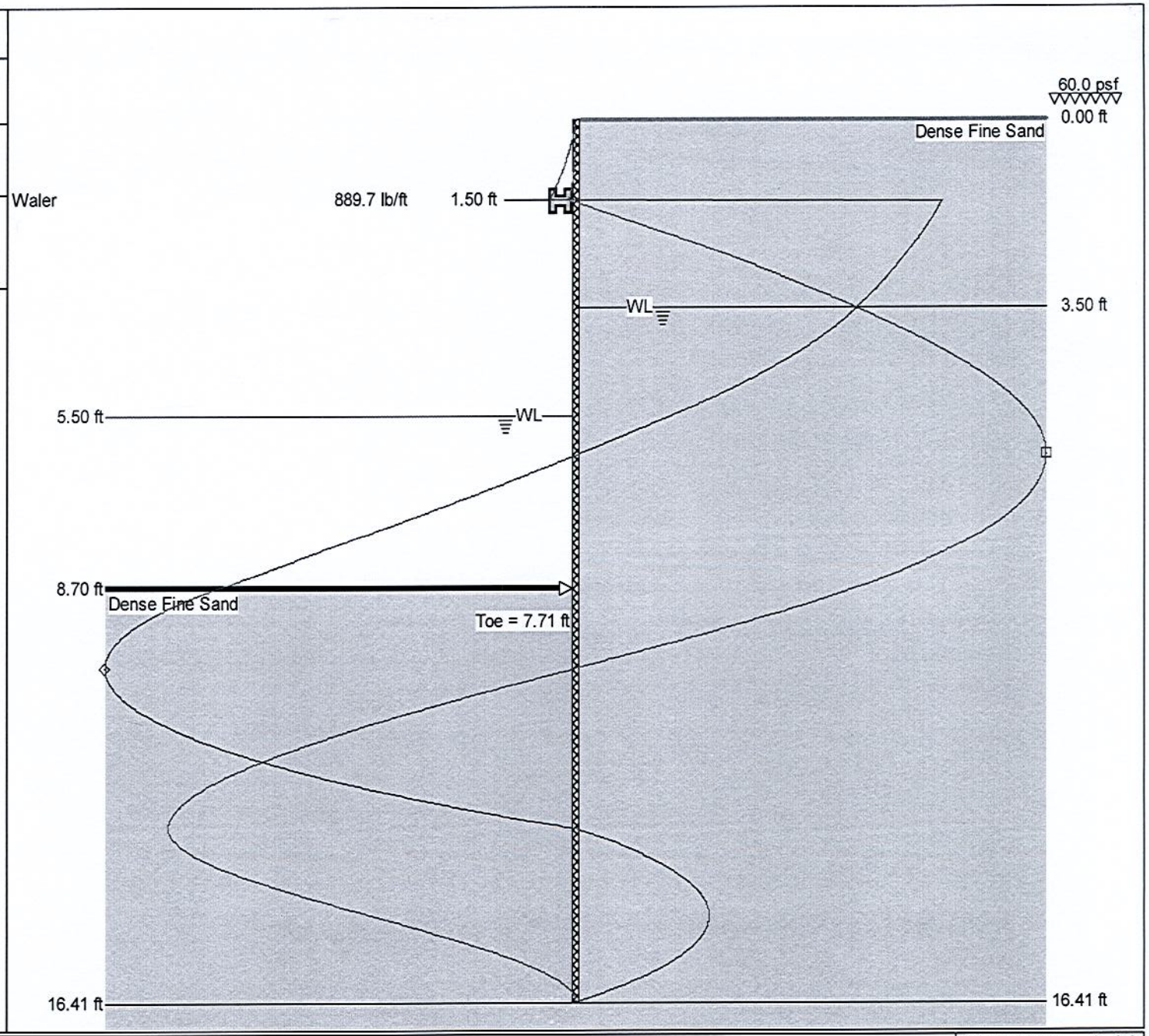

Dynamic Engineering Solutions, Inc.

950 N Federal Hwy, Suite 212, Pompano Beach, FL
John H. Omslaer, PE 52733, CA 26829

SPW911, v2.00

© 2001, Pile Buck®, Inc.
Email: pilebuck@pilebuck.com
Web: www.pilebuck.com

Client: ocean
Site: 10200 W Broad View
Ref: franco
Page: 2
Date: 2.25.16
Sheet: batters
Pressure: Rankine
Toe: Fixed Earth Support

Input Data

Depth Of Excavation = 8.70 ft
Surcharge = 60.0 psf
Depth Of Active Water = 3.50 ft
Depth Of Passive Water = 5.50 ft
Water Density = 62.43 pcf
Minimum Fluid Density = 31.82 pcf

Soil Profile

Depth (ft)	Soil Name	γ(pcf)	γ'(pcf)	C (psf)	C_a (psf)	ϕ (°)	δ (°)	K_a	K_{ac}	K_p	K_{pc}
0.00	Dense Fine Sand	118.37	68.73	0.0	0.0	35.0	0.0	0.27	0.00	3.69	0.00

Solution

Sheet

Sheet Name	I (in⁴/ft)	E (psi)	Z (in³/ft)	f (psi)	Maximum Bending Moment (ftlb/ft)	Upstand (ft)	Toe (ft)	Pile Length (ft)
batters		3.04E+07				0.00	7.71	16.41

Load Model: Area Distribution

Supports

Depth (ft)	Type	Linear Load (lb/ft)
1.50	Waler	889.7

Maxima

	Maximum	Depth
Bending Moment	2439.4 ftlb/ft	6.22 ft
Pressure	349.4 psf	8.70 ft
Shear Force	1063.9 lb/ft	10.19 ft

© 2001, Pile Buck®, Inc.
Email: pilebuck@pilebuck.com
Web: www.pilebuck.com

Client: ocean
Site: 10200 W Broad View
Ref: franco
Page: 4
Date: 2.25.16
Sheet: batters
Pressure: Rankine
Toe: Fixed Earth Support

depth (ft)	P (psf)	M (ftlb/ft)	D (in)	F (lb/ft)
0.00	16.2	0.0		0.4
0.15	21.0	0.3		3.0
0.29	25.8	1.0		6.6
0.44	30.2	2.2		10.5
0.58	35.0	4.2		15.4
0.73	39.8	6.9		21.0
0.87	44.2	10.2		26.8
1.02	49.0	14.8		33.9
1.16	53.3	20.0		40.9
1.31	58.2	26.8		49.3
1.45	63.0	35.0		58.4
1.60	67.3	-53.7		-822.3
1.74	72.1	-176.5		-811.8
1.89	76.9	-297.7		-800.5
2.03	81.3	-406.3		-789.7
2.18	86.1	-524.1		-777.1
2.32	90.5	-629.4		-765.0
2.47	95.3	-743.3		-751.0
2.61	100.1	-855.1		-736.2
2.76	104.5	-954.7		-722.2
2.90	109.3	-1062.0		-706.1
3.05	114.1	-1166.8		-689.3
3.19	118.5	-1259.9		-673.4
3.34	123.3	-1359.7		-655.1
3.48	127.6	-1448.0		-638.0
3.63	139.2	-1542.3		-617.9
3.78	151.3	-1633.4		-595.9
3.92	162.4	-1713.3		-574.4
4.07	174.6	-1797.6		-549.0
4.21	185.7	-1870.9		-524.3
4.36	197.8	-1947.4		-495.4
4.50	210.0	-2019.4		-464.6
4.65	221.1	-2080.7		-435.1
4.79	233.3	-2143.3		-400.8
4.94	245.5	-2200.7		-364.7
5.08	256.5	-2248.0		-330.3
5.23	268.7	-2294.4		-290.8
5.37	279.8	-2331.4		-253.2
5.52	290.5	-2366.0		-210.1
5.66	293.3	-2394.0		-166.2
5.81	295.8	-2413.7		-125.9
5.95	298.6	-2428.9		-81.2
6.10	301.4	-2437.5		-36.1
6.24	303.9	-2439.3		5.3
6.39	306.7	-2434.7		51.3
6.53	309.3	-2424.6		93.4
6.68	312.0	-2406.7		140.1
6.82	314.8	-2381.7		187.3
6.97	317.4	-2352.9		230.5
7.11	320.2	-2314.3		278.5
7.26	322.7	-2272.9		322.4
7.41	325.5	-2220.4		371.2
7.55	328.3	-2160.6		420.4
7.70	330.8	-2099.7		465.5
7.84	333.6	-2025.6		515.5
7.99	336.4	-1943.9		565.9
8.13	338.9	-1863.1		612.0
8.28	341.7	-1766.9		663.2
8.42	344.3	-1672.7		710.2
8.57	347.1	-1561.6		762.2
8.71	344.0	-1442.7		814.5
8.86	311.8	-1327.9		859.2
9.00	276.5	-1195.0		903.2
9.15	241.1	-1055.9		941.8
9.29	209.0	-924.8		972.4
9.44	173.6	-776.1		1000.9
9.58	141.5	-637.6		1022.2
9.73	106.1	-482.3		1040.6
9.87	70.8	-324.7		1053.7
10.02	38.6	-180.0		1061.0
10.16	3.3	-20.1		1063.9
10.31	-28.8	125.2		1061.9
10.45	-64.2	284.4		1054.7
10.60	-99.6	442.1		1042.1
10.74	-131.7	583.4		1026.1
10.89	-167.0	735.9		1003.4
11.03	-202.4	884.6		975.3
11.18	-234.5	1015.7		945.3
11.33	-269.9	1154.8		907.1
11.47	-302.0	1276.0		867.8
11.62	-337.4	1402.6		819.4
11.76	-372.7	1521.5		765.8
11.91	-404.9	1622.2		712.4
12.05	-440.2	1724.2		648.6
12.20	-475.6	1816.2		579.5
12.34	-507.7	1890.4		512.1
12.49	-543.1	1961.0		432.8
12.63	-575.2	2014.4		356.2
12.78	-610.6	2060.7		266.7
12.92	-645.9	2093.1		172.0
13.07	-678.1	2109.9		81.3
13.21	-713.4	2113.3		-9.2
13.36	-745.6	2097.1		-57.8
13.50	-780.9	2055.6		-106.2
13.65	-816.3	1991.8		-149.3
13.79	-848.4	1916.6		-183.8
13.94	-883.7	1817.4		-216.7
14.08	-919.1	1703.4		-244.3
14.23	-951.2	1589.3		-264.8
14.37	-986.6	1454.5		-282.3
14.52	-1018.7	1325.7		-293.5
14.66	-1054.1	1179.5		-300.8
14.81	-1089.4	1031.2		-302.8
14.96	-1121.6	896.7		-300.0
15.10	-1156.9	751.5		-291.8
15.25	-1192.3	611.8		-278.3
15.39	-1224.4	491.6		-261.5
15.54	-1259.8	369.5		-237.8
15.68	-1291.9	269.6		-211.7
15.83	-1327.3	174.6		-178.0
15.97	-1362.6	97.5		-138.9
16.12	-1394.8	45.3		-98.7
16.26	-1430.1	9.9		-49.4
16.41	-1462.3	0.0		0.0

Dynamic Engineering Solutions, Inc.
950 N Federal Hwy, Suite 212, Pompano Beach, FL
John H. Omslaer, PE 52733, CA 26829

SPW911, v2.00

© 2001, Pile Buck®, Inc.
Email: pilebuck@pilebuck.com
Web: www.pilebuck.com

RATIONAL ANALYSIS - BATTER PILES

Residence :	Franco
Location :	10200 W Broadview Dr
Municipality:	Bay Harbor Islands, FL
Drawing Ref:	
Date:	2/24/2016

wc - Cap Width	3.10	feet
dwc - Dist to Fiber - Width	28	in
h - Cap Depth	2.00	feet
dh - Dist. to Fiber - Depth	21	in
Steel Spacing "s" =	1.00	feet

Specific Data

Type of Pile	12x12 Concrete w/ 4-7/16" Lo-Lax Strands	
f'cCap	5000.00	psi
f'cPile	6000.00	psi
fsSteel	60000.00	psi, ASTM grade 60
fsu - Strength of Strands	270000	psi
n - Number of Strands	4	
a - Area per Strand	0.12	in^2
b - pile size	12	in
sl - Slope of Batter	1 to 3	
Aspiral - Area of Tie	0.05	in^2
s - Tie Spacing	8	in
phi - understrength	0.85	
M - Moment from Sheet 1	2439	ftlb/ft
R - Reaction from Sheet 1	1064	lb/ft
S - Pile Spacing	10	feet

MMAX = M/2000 = 12.20 kip ft/ft

P = R x S/2000 = 5.32 kips

CHECK PILE CAPACITY

BATTER PILE IN COMPRESSION

theta = atan(sl) = 71.56 degrees

FC = P / (cos(theta)) = 17.22 kips = 8.61 ton

Driven to 25 Ton Capacity

John H. Omslaer, P.E.
FL License #52733 / EB # 26829
Dynamic Engineering Solutions, Inc.
351 S Cypress Rd Suite 303
Pompano Beach, FL 33060

RATIONAL ANALYSIS - KING AND BATTER PILES

Residence : Franco
Location : 10200 W Broadview Dr
Municipality: Bay Harbor Islands, FL
Drawing Ref: 0.00
Date: 2/24/16

Specific Data

Type of Pile	12x12 Concrete w/ 4-7/16" Lo-Lax Strands	
f'cCap	5000.00	psi
f'cPile	5000.00	psi
fsSteel	60000.00	psi, ASTM grade 60
fsu - Strength of Strands	270000	psi
n - Number of Strands	4	
a - Area per Strand	0.12	in^2
b - pile size	12	in
sl - Slope of Batter	1 to 3	
phi - Understrenght Factor	0.85	
d - Distance to Extreme Fiber	9	in
Aspiral - Area of Tie	0.05	in^2
s - Tie Spacing	8	in
MMAX =	12.20	kips.ft
Aps = Area of Steel = n x a =	0.48	in^2
Ac = Area of Pile = b^2	144.00	in^2

CHECK ULTIMATE MOMENT CAPACITY

Mu = (.37 x b x Aps x fsu)/12000 = 47.95 kips.ft

Mu / MMAX = 3.93 > 1.0 Service Load Factor, O.K.

CHECK SHEAR

Vc = (2 x (f'cPile)^.5 x b x d) / 1000 =	15.27	kips
Av = (12/s) * Aspiral =	0.08	in^2
Vu = phi x (Av x (fsSteel)/1000 x d/s + Vc) =	17.29	kips
Ro = MAXIMUM SHEAR = P =	5.32	kips

Vu/Ro = 3.25 > 1.0 W5 SPIRAL TIES @ 8", O.K.

John H. Omslaer, P.E.
FL License #52733 / EB # 26829
Dynamic Engineering Solutions, Inc.
351 S Cypress Rd Suite 303
Pompano Beach, FL 33060

2/25/16

RATIONAL ANALYSIS - BEAM CAP DESIGN

Residence : Franco
Location : 10200 W Broadview Dr
Municipality: Bay Harbor Islands, FL
Drawing Ref: 0.00
Date: 2/24/16

Specific Data

wc - Cap Width	3.10	feet
dwc - Distance to Extreme Fiber - Width	28.00	in
h - Cap Depth	2.00	feet
dh - Distance to Extreme Fiber - Depth	21.00	in
dc - Density of Concrete	150.00	lbf/ft^3
spac - Pile Spacing	10.00	feet
fsSteel	60000.00	psi, ASTM grade 60
f'cCap	5000.00	psi
phiF - Understrength Factor for Flexure	0.90	
phiS - Understrength Factor for Shear	0.85	

LATERAL LOADING - SIMPLY SUPPORTED WITH POINT LOAD AT CENTER = CAP FORCE

R = Reaction Per Linear Ft = 1.06 kips, From Program

L = spac =	10.00	feet
R1 = CAP FORCE = R x L	10.64	kips
a =	na	feet
b =	na	feet
Mo - Max Moment = R x L^2/10 =	10.64	kips.ft
Vo - Maximum Shear = R1	10.64	kips
Mu - Factored Moment = 1.7 x Mo =	18.09	kips.ft
Vu - Factored Shear = 1.7 x Vo =	18.09	kips

CHECK BENDING

AS Req'd = M / (4 x dwc) 0.16 in^2 / ft
Try #5, Area "a" = 0.31 in^2
Spacing "s" = 1.00 ft
a / s = 0.31 in^2 / ft > 0.16 AS Req'd

Use min. #5 at 12" o.c.

CHECK SHEAR

Vc = (phiS x 2 x (f'cCap)^.5 x dwc x h) / 1000 = 80.78 kips

Vu/phiS - Vc : -59.50 < 8 x (f'cCap)^2 x dwc x h : 380.14 kips, O.K.

phiS x Vc = 68.66 > Vu = 18.09 kips

Use nominal #3 ties @ 12"
#3's at 3" Between Piles

John H. Omslaer, P.E.
FL License #52733 / EB # 26829
Dynamic Engineering Solutions, Inc.
351 S Cypress Rd Suite 303
Pompano Beach, FL 33060

2/25/16

MAXIMUM STRESS IN TIMBER DECK

Residence :	Franco
Location :	10200 W Broadview Dr
Municipality:	Bay Harbor Islands, FL
Drawing Ref:	
Date:	2/25/16

Specific Data

LL - Live Load	60	psf
DL - Dead Load	8	psf

nom	s - in^3	Fb-psi
2x6	7.563	1200
2x8	13.141	1200
2x10	21.391	1200
2x12	31.641	1200
3x6	12.604	1200
3x8	21.901	1200
3x10	35.651	1200
3x12	52.734	1200

Joist Calculations

jw Joist Width (in)	2.5	in	
jd - Joist Depth (in)	7.25	in	
ZJ - Joist Section Modulus (in^3)	21.901	in^3	
jwl - Width of Load / Joist (ft)	1.333333	ft	
Fb - Bending	1200	psi, T 4B, NDS	
Cf - Size Fact. - (12/jd)^(1/9)	1.057587		
Cfu - Flat Use Fact.	1		All Adjustment Factors from
Cr - Repetetive Fact.(joist only)	1		Table 4B of NDS (pg 31, 1997 ed.)
Cm - Wet Service Factor	0.85	CCA Treated	
Ch - Shear Factor	1		
Fb' - Fb x Cf x Cfu x Cr x Cr x Cm x Ch	**1078.738**	**psi**	
Cd - Duration Factor	1.25	7 days per appendix B	
cl - Centerline Dist. between Piles (ft)	10	ft	
d - Pile Dia. (in)	12	in	
$\underline{W}$ = ((LL + DL) x jwl) / (Cd) =	72.53333	lbf/ft	
span = cl - d - b =	8.79	ft	
M = ((span)^2 x $\underline{W}$) / 8 =	700.79	ft.lbf	
Fb = (M x 12) / (ZJ) =	383.98	psi	
383.98 < 1078.74	**Fb' < SA, O.K.**		

Joist Shear Calculations

fv - Allowable	90	psi
V=(span x jwl x (ll+DL))/2	398.6	lbf
Fv=(3xV)/(2 x jw x jd)	32.98	psi
32.98391 <	**90**	**Fv<fv, OK**

Substringer Calculations

b Substringer Width (in)	2.5	in
sd - Substringer Depth (in)	9.25	in
ZS - Substringer Section Modulus (in^3)	35.651	in^3
swl - Width of Load / Substringer (ft)	5.00	ft
a - Max Length of Substringer (ft)	5.00	ft
Fb - Bending	1200	psi, T 4B, NDS
Cf - Size Fact. - (12/sd)^(1/9)	1.029343	
Cfu - Flat Use Fact.	1	All Adjustment Factors from
Cr - Repetetive Fact.(joist only)	1	Table 4B of NDS (pg 31, 1997 ed.)
Cm - Wet Service Factor	0.85	CCA Treated
Ch - Shear Factor	1	
Fb' - Fb x Cf x Cfu x Cr x Cr x Cm x Ch	**1049.929**	**psi**
Cd - Duration Factor	1.25	7 days per appendix B
$\underline{W}$ = ((LL + DL) x jwl) / (Cd) =	272	lbf/ft
span = a =	5.00	ft
M = ((span)^2 x $\underline{W}$) / 8 =	850.00	ft.lbf
Fb = (M x 12) / (ZS) =	286.11	psi
286.11 < 1049.93	**Fb < SA, O.K.**	

John H. Omslaer, P.E.
FL License #52733,EB#26829
Dynamic Engineering Solutions, Inc.
351 S Cypress Rd, Suite 303
Pompano Beach, FL 33060

2/25/16

MAXIMUM STRESS IN TIMBER DECK

Residence : Franco
Location : 10200 W Broadview Dr
Municipality: Bay Harbor Islands, FL
Drawing Ref: 0.00
Date: 2/25/16

Specific Data

LL - Live Load	60 psf
DL - Dead Load	8 psf

Check Stringers For Deflection

L = span = cl - d - b =	105.50	in
W = ((LL + DL) x jwl) / (Cd) =	6.04	lbf/in
E = Mod of Elasticity	1760000	lbf/in^2
jw Joist Width (in)	2.50	in
jd - Joist Depth (in)	7.25	in
I = (jw x jd^3) / 12	79.39128	in^4
delta = (5 x W x L^4) / (384 x E x I)	0.069778	in
L / 360 =	0.293056	in
delta <<< L/360	**O.K. in Deflection**	

Fastener Specifications - Double Shear at Piling/Hanger

Fastener Type at Piling	3/4 in Thru bolts	
n - Number of Fasteners at Piling	2	
Cap - Capacity	1620	lbf, per t 8.3A
A - Supported Area	20.00	ft^2
Cm - Wet Service in Shear	0.70	
Load = ((LL + DL) x A) / (Cm x n)	971.4286	lbf
1620 lbf >	**971.4286**	**lbf, O.K**

Double Shear@ Pile			
Thru Bolts - Z perpendicular - T8.3A			
	0.625	**0.75**	1
1.5	1130	1330	1530
2.5	1345	1620	2155
3.5	1560	1910	2780

Single Shear			
Wedge Anchors - Z parallell - T8.2E			
	0.5	**0.625**	**0.75**
1.5	660	930	1270
2.5	750	1170	1560
3.5	750	1170	1680

John H. Omslaer, P.E.
FL License #52733,EB#26829
Dynamic Engineering Solutions, Inc.
351 S Cypress Rd, Suite 303
Pompano Beach, FL 33060

2/24/16

TOWN OF BAY HARBOR ISLANDS
BUILDING DEPARTMENT

NOTICE TO THE BAY HARBOR ISLANDS BUILDING DEPARTMENT EMPLOYMENT AS SPECIAL INSPECTOR UNDER THE FLORIDA BUILDING CODE

I, (we) have been retained by: _____ to perform special inspector services under the Florida Building Code at the _____ project on the below listed structure as of _____ (date). I am a Professional Engineer or Architect licensed in the State of Florida.

Process Number: _____ **Master Permit (if applicable):** _____

- (●) Special Inspector for Pilings, FBC 1822.1.20
- ( ) Special Inspector for Soil Compaction, FBC 1820.3.1
- ( ) Special Inspector for Precast Attachments, FBC 1937.12.2 (By P.E. or R.A.)
- ( ) Special Inspector for Reinforced Masonry, FBC 2122.4
- ( ) Special Inspector for Steel Bolted Welded Connections, FBC 2218.2 (by P.E. or R.A.)
- ( ) Special Inspector for Trusses over 35 feet long or 6 feet high, FBC 2319.17.2.4.2 (By P.E. or R.A.)
- ( ) Special Inspector for _____

NOTE: Only the marked boxes apply.

The following individual's employed by this firm or me are authorized representatives to perform inspections*

1. John H. Omslaer P.E. 2. _____

3. _____ 4. _____

NOTE: FBC 2001 HVZ sections 1927.12.2, 2218.2, 2319.17.4.2 requires either a Registered Professional Engineer or Registered Architect to perform the actual inspections.

I, (we) will notify the Town of Bay Harbor Islands Building Department of any changes regarding authorized personnel performing inspection services.

I, (we) understand that a Special Inspection Log for each building must be displayed in a convenient location on the site for reference by the Bay Harbor Islands Building Department Inspector. All mandatory inspections, as required of the Florida Building Code, Inspection performed by the Special Inspector hired by the Owner are in addition to the mandatory inspections performed by the Building Department. Further, upon completion of the work under each building permit, I will submit to the Building Inspector at the time of final inspection the completed Inspection Log form and sealed statement that, to the best of my knowledge, belief and professional judgement those portions outlined above meet the intent of the Florida Building Code and are in subsequent accordance with the approved plans.

Signed and Sealed
5/28/15
License Number
Date: 52733

Dynamic Engineering Solutions, Inc.
John H. Omslaer, PE 52733, EB26829
950 N. Federal Hwy. Suite212
Pompano Beach, FL 33062

Architect/Engineer Signature: _____
Architect/Engineer Name Printed: _____
Address: _____
Phone Number: _____
Owner Agent Signature: _____
Owner Agent Name Printed: _____
Building Department Accepted by: Jaime M. Eisen, P.E.

TOWN OF BAY HARBOR ISLANDS
BUILDING DEPARTMENT

NOTICE TO THE BAY HARBOR ISLANDS BUILDING DEPARTMENT EMPLOYMENT AS SPECIAL INSPECTOR UNDER THE FLORIDA BUILDING CODE

I, (we) have been retained by: OCEAN Consulting LLC to perform special inspector services under the Florida Building Code at the 1620 W Broadview Dr project on the below listed structure as of _____ (date). I am a Professional Engineer or Architect licensed in the State of Florida.

Process Number: _____ **Master Permit (if applicable):** _____

- (●) Special Inspector for Pilings, FBC 1822.1.20
- ( ) Special Inspector for Soil Compaction, FBC 1820.3.1
- ( ) Special Inspector for Precast Attachments, FBC 1937.12.2 (By P.E. or R.A.)
- ( ) Special Inspector for Reinforced Masonry, FBC 2122.4
- ( ) Special Inspector for Steel Bolted Welded Connections, FBC 2218.2 (by P.E. or R.A.)
- ( ) Special Inspector for Trusses over 35 feet long or 6 feet high, FBC 2319.17.2.4.2 (By P.E. or R.A.)
- ( ) Special Inspector for _____

NOTE: Only the marked boxes apply.

The following individual's employed by this firm or me are authorized representatives to perform inspections*

1. John H. Omslaer P.E. 2. _____

3. _____ 4. _____

NOTE: FBC 2001 HVZ sections 1927.12.2, 2218.2, 2319.17.4.2 requires either a Registered Professional Engineer or Registered Architect to perform the actual inspections.

I, (we) will notify the Town of Bay Harbor Islands Building Department of any changes regarding authorized personnel performing inspection services.

I, (we) understand that a Special Inspection Log for each building must be displayed in a convenient location on the site for reference by the Bay Harbor Islands Building Department Inspector. All mandatory inspections, as required of the Florida Building Code, Inspection performed by the Special Inspector hired by the Owner are in addition to the mandatory inspections performed by the Building Department. Further, upon completion of the work under each building permit, I will submit to the Building Inspector at the time of final inspection the completed Inspection Log form and sealed statement that, to the best of my knowledge, belief and professional judgement those portions outlined above meet the intent of the Florida Building Code and are in subsequent accordance with the approved plans.

Signed and Sealed
5/28/15
License Number
Date: 52733

Dynamic Engineering Solutions, Inc.
John H. Omslaer, PE 52733, EB26829
950 N. Federal Hwy. Suite212
Pompano Beach, FL 33062

Architect/Engineer Signature: _____
Architect/Engineer Name Printed: _____
Address: _____
Phone Number: _____
Owner Agent Signature: _____
Owner Agent Name Printed: _____
Building Department Accepted by: **Jaime M. Eisen, P.E.**

TOWN OF BAY HARBOR ISLANDS
BUILDING DEPARTMENT

NOTICE TO THE BAY HARBOR ISLANDS BUILDING DEPARTMENT EMPLOYMENT AS SPECIAL INSPECTOR UNDER THE FLORIDA BUILDING CODE

I, (we) have been retained by: Ocean Consulting LLC to perform special inspector services under the Florida Building Code at the 10200 W Broadview Dr project on the below listed structure as of _____ (date). I am a Professional Engineer or Architect licensed in the State of Florida.

Process Number: _____ **Master Permit (if applicable):** _____

- ● Special Inspector for Pilings, FBC 1822.1.20
- ○ Special Inspector for Soil Compaction, FBC 1820.3.1
- ○ Special Inspector for Precast Attachments, FBC 1937.12.2 (By P.E. or R.A.)
- ○ Special Inspector for Reinforced Masonry, FBC 2122.4
- ○ Special Inspector for Steel Bolted Welded Connections, FBC 2218.2 (by P.E. or R.A.)
- ○ Special Inspector for Trusses over 35 feet long or 6 feet high, FBC 2319.17.2.4.2 (By P.E. or R.A.)
- ○ Special Inspector for _____

NOTE: Only the marked boxes apply.

The following individual's employed by this firm or me are authorized representatives to perform inspections*

1. John H. Omslaer P.E. 2. _____

3. _____ 4. _____

NOTE: FBC 2001 HVZ sections 1927.12.2, 2218.2, 2319.17.4.2 requires either a Registered Professional Engineer or Registered Architect to perform the actual inspections.

I, (we) will notify the Town of Bay Harbor Islands Building Department of any changes regarding authorized personnel performing inspection services.

I, (we) understand that a Special Inspection Log for each building must be displayed in a convenient location on the site for reference by the Bay Harbor Islands Building Department Inspector. All mandatory inspections, as required of the Florida Building Code, Inspection performed by the Special Inspector hired by the Owner are in addition to the mandatory inspections performed by the Building Department. Further, upon completion of the work under each building permit, I will submit to the Building Inspector at the time of final inspection the completed Inspection Log form and sealed statement that, to the best of my knowledge, belief and professional judgement those portions outlined above meet the intent of the Florida Building Code and are in subsequent accordance with the approved plans.

Signed and Sealed 5/28/15

License Number

Date: 52733

Dynamic Engineering Solutions, Inc.
John H. Omslaer, PE 52733, EB26829
950 N. Federal Hwy. Suite212
Pompano Beach, FL 33062

Architect/Engineer Signature: _____
Architect/Engineer Name Printed: _____
Address: _____
Phone Number: _____
Owner Agent Signature: _____
Owner Agent Name Printed: _____
Building Department Accepted by: Jaime M. Eisen, P.E.

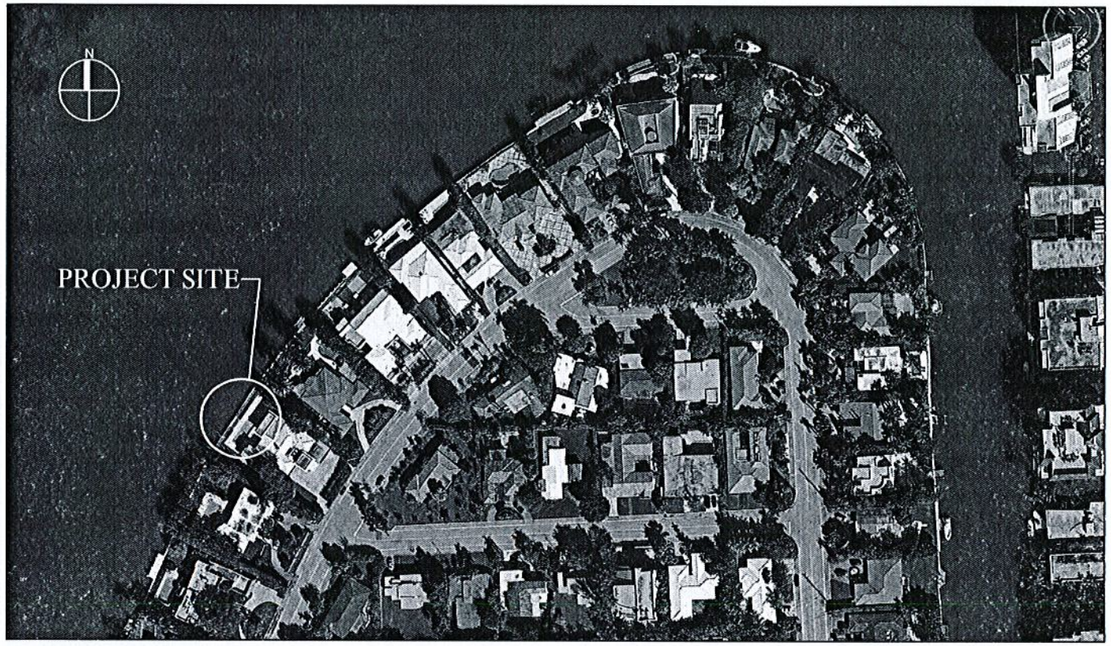

LOCATION MAP AND LEGAL DESCRIPTION

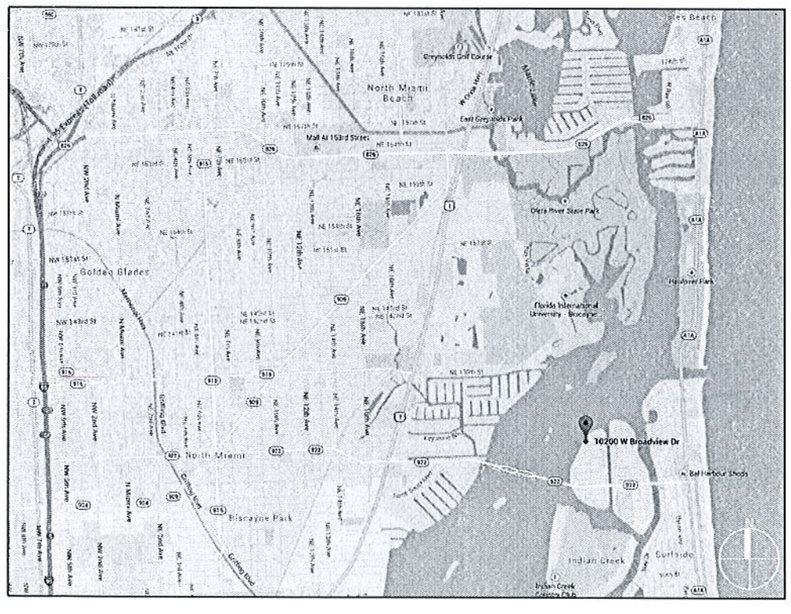

PROJECT SITE LOCATION:
10200 W Broadview Drive
Bay Harbor Islands, FL 33154

LATITUDE: 25 DEG 53'31.06"N
LONGITUDE: 80 DEG 8'15.24"W

FOLIO No.: 13-2227-001-4290

PROJECT SITE LEGAL DESCRIPTION:
BAY HARBOR ISLAND PB 46-5
LOT 42 & N1/2 OF 43 BLK 23
LOT SIZE 112.500 X 175
OR 19233-3783 08 2000 1

CU-2015-0023
RER - NATURAL RESOURCES DIVISION
PRELIMINARY APPROVAL
NAME
DATE 2/29/16

GENERAL NOTES:
1. ELEVATIONS SHOWN REFER TO THE NATIONAL GEODETIC VERTICAL DATUM (NGVD) OF 1929.
2. ALL DIMENSIONS ON PLANS ARE SUBJECT TO VERIFICATION IN THE FIELD.
3. IT IS THE INTENT OF THESE PLANS TO BE IN ACCORDANCE WITH APPLICABLE CODES AND AUTHORITIES HAVING JURISDICTION. ANY DISCREPANCIES BETWEEN THESE PLANS AND APPLICABLE CODES SHALL BE IMMEDIATELY BROUGHT TO THE ATTENTION OF ENGINEER BEFORE PROCEEDING WITH WORK. CONTRACTOR AND ALL SUBCONTRACTORS ARE RESPONSIBLE FOR ALL LINES, ELEVATIONS, AND MEASUREMENTS IN CONNECTION WITH THEIR WORK.
4. IT IS THE INTENT OF THESE PLANS AND THE RESPONSIBILITY OF THE CONTRACTOR TO COMPLY WITH LOCAL, STATE, AND FEDERAL ENVIRONMENTAL PERMITS ISSUED FOR THIS PROJECT. IT SHALL BE THE CONTRACTOR'S RESPONSIBILITY TO FAMILIARIZE AND GOVERN HIMSELF BY ALL PROVISIONS OF THESE PERMITS.
5. APPLICABLE BUILDING CODE: FLORIDA BUILDING CODE, 2014 EDITION (AND CURRENT ADDENDUMS).
6. APPROVED CONTRACTOR TO DETERMINE THE SUITABILITY OF EXISTING STRUCTURES AND VERIFY ALL DIMENSIONS. THE APPROVED CONTRACTOR IS RESPONSIBLE FOR ALL METHODS, MEANS, SEQUENCES AND PROCEDURES OF WORK.
7. DO NOT SCALE DRAWINGS FOR DIMENSIONS.
8. CONTRACTOR TO VERIFY LOCATION OF EXISTING UTILITIES PRIOR TO COMMENCING WORK.
9. CONTRACTOR TO PROPERLY FENCE AND SECURE AREA WITH BARRICADES.
10. ANY DEVIATION AND/OR SUBSTITUTION FROM THE INFORMATION PROVIDED HEREIN SHALL BE SUBMITTED TO THE ENGINEER FOR APPROVAL PRIOR TO COMMENCEMENT OF WORK.
11. ALL NEW MATERIALS AND/OR PATCHWORK SHALL BE PROVIDED TO MATCH EXISTING MATERIALS AND/OR ADJOINING WORK WHERE PRACTICAL EXCEPT AS SPECIFICALLY NOTED HEREIN.
12. LICENSED CONTRACTOR SHALL USE ALL POSSIBLE CARE TO PROTECT ALL EXISTING MATERIALS, SURFACES, AND FURNISHINGS FROM DAMAGE DURING ALL PHASES OF CONSTRUCTION.
13. THE LICENSED CONTRACTOR TO INSTALL AND REMOVE ALL SHORING AND BRACING AS REQUIRED FOR THE PROPER EXECUTION OF THE WORK.
14. ALL NEW WORK AND/OR MATERIALS SHALL CONFORM TO ALL REQUIREMENTS OF EACH ADMINISTRATIVE BODY HAVING JURISDICTION IN EACH PERTAINING CIRCUMSTANCE.
15. THE CONTRACTOR WILL EMPLOY AND MAINTAIN ADEQUATE SEDIMENT AND EROSION CONTROL MEASURES TO PROTECT BISCAYNE BAY FROM SEDIMENT AND CONSTRUCTION DEBRIS.

DOCK: LL 60 PSF

BOLTS
1. ALL BOLTS SHALL BE STAINLESS STEEL, UNLESS OTHERWISE NOTED.

WOOD
1. PRIMARY WOOD FRAMING MEMBERS SHALL BE NUMBER 2 PRESSURE TREATED SOUTHERN PINE OR BETTER.
2. ALL DIMENSIONS ON PLANS ARE SUBJECT TO VERIFICATION IN THE FIELD.

CONCRETE
1. CONCRETE SHALL CONFORM TO ACI 318 (LATEST ED.) AND SHALL BE REGULAR WEIGHT, SULFATE RESISTANT, WITH A DESIGN STRENGTH OF 5,000 PSI AT 28 DAYS W/ A MAX WATER-CEMENTIOUS MATERIALS RATIO, BY WEIGHT, NORMAL WEIGHT AGGREGATE CONCRETE OF 0.40.
2. OWNER SHALL EMPLOY AND PAY FOR TESTING SERVICES FROM AN INDEPENDENT TESTING LABORATORY FOR CONCRETE SAMPLING AND TESTING IN ACCORDANCE W/ ASTM.
3. LICENSED CONTRACTOR IS RESPONSIBLE FOR THE ADEQUACY OF FORMS AND SHORING AND FOR SAFE PRACTICE IN THEIR USE AND REMOVAL.
4. CONCRETE COVER SHALL BE 3" UNLESS OTHERWISE NOTED ON APPROVED DRAWINGS.
5. REINFORCING STEEL SHALL BE IN CONFORMANCE WITH THE LATEST VERSION OF ASTM A615 GRADE 60 SPECIFICATIONS. ALL REINFORCEMENT SHALL BE PLACED IN ACCORDANCE W/ ACI 315 AND ACI MANUAL OF STANDARD PRACTICE.
6. SPLICES IN REINFORCING BARS SHALL NOT BE LESS THAN 48 BAR DIAMETERS AND REINFORCING SHALL BE CONTINUOUS AROUND ALL CORNERS AND CHANGES IN DIRECTION. CONTINUITY SHALL BE PROVIDED AT CORNERS OR CHANGES IN DIRECTION BY BENDING THE LONGITUDINAL STEEL AROUND THE CORNER 48 BAR DIAMETERS.

PILE DRIVING NOTES
1. PILE DRIVING OPERATIONS SHALL BE OBSERVED BY A SPECIAL INSPECTOR, INCLUDING TEST PILES SUFFICIENT TO DETERMINE THE APPROXIMATE LENGTH REQUIRED TO MEET DESIGN CAPACITY.
2. PILES SHALL BE DRIVEN USING AN APPROVED CUSHION BLOCK CONSISTING OF MATERIAL SO ARRANGED SO AS TO PROVIDE THE TRANSMISSION OF THE HAMMER ENERGY.
3. PILES SHALL BE DRIVEN TO REQUIRED CAPACITY A MIN 12. INTO BERM.
4. PILES SHALL BE DRIVEN WITH A DROP HAMMER OR GRAVITY HAMMER PROVIDED THE HAMMER SHALL WEIGH NO LESS THAN 3,000 POUNDS, AND THE FALL OF THE HAMMER SHALL NOT EXCEED 6 FT.
5. PILES SHALL BE DRIVEN WITH A VARIATION OF NOT MORE THAN ¼" PER FOOT FROM THE VERTICAL, OR FROM THE BATTER LINE INDICATED, WITH A MAX VARIATION OF THE HEAD OF THE PILE FROM THE POSITION SHOWN ON THE PLANS OF NOT MORE THAN 3".
6. WHERE PILING MUST PENETRATE STRATA OFFERING HIGH RESISTANCE TO DRIVING, THE STRUCTURAL ENGINEER OF RECORD OR SPECIAL INSPECTOR MAY REQUIRE THAT PILES BE SET IN PRE-DRILLED OR PUNCHED HOLES. THE PILES SHALL REACH THEIR FINAL PENETRATION BY DRIVING.

RECEIVED
FEB 29 2016
Natural Resources Section
Environmental Resources Restoration
Division (NRSRD)

FRANCO
WATERFRONT IMPROVEMENT PROJECT
Bay Harbor Island, Florida

CLIENT:
Ms. ROSANA FRANCO
10200 W Broad View Dr.
Bay Harbor Islands, FL 33154

ENVIRONMENTAL CONSULTANT:
OCEAN CONSULTING, LLC
340 Minorca Avenue, Suite 7
Coral Gables, Florida 33134
Tel: (305) 921-9344
Fax: (305) 677-3254

CONTRACTOR:

PROJECT ENGINEER:
DYNAMIC ENGINEERING SOLUTIONS, INC.
950 N. Federal Highway, Suite 212
Pompano Beach, FL 33062
Tel: (954) 545-1740
Fax: (954) 545-1721

SEAL / SIGNATURE / DATE

2/25/16
John Omslaer
PE 52733, CA 26829

PERMIT DRAWINGS

Issue #	Issue Date
④	November 9, 2015
⑤	November 13, 2015
⑥	December 4, 2015
⑦	February 5, 2016

PROJECT: 14-4650

PROJECT LOCATION & NOTES

SCALE : AS SHOWN
SHEET NO.
S-1

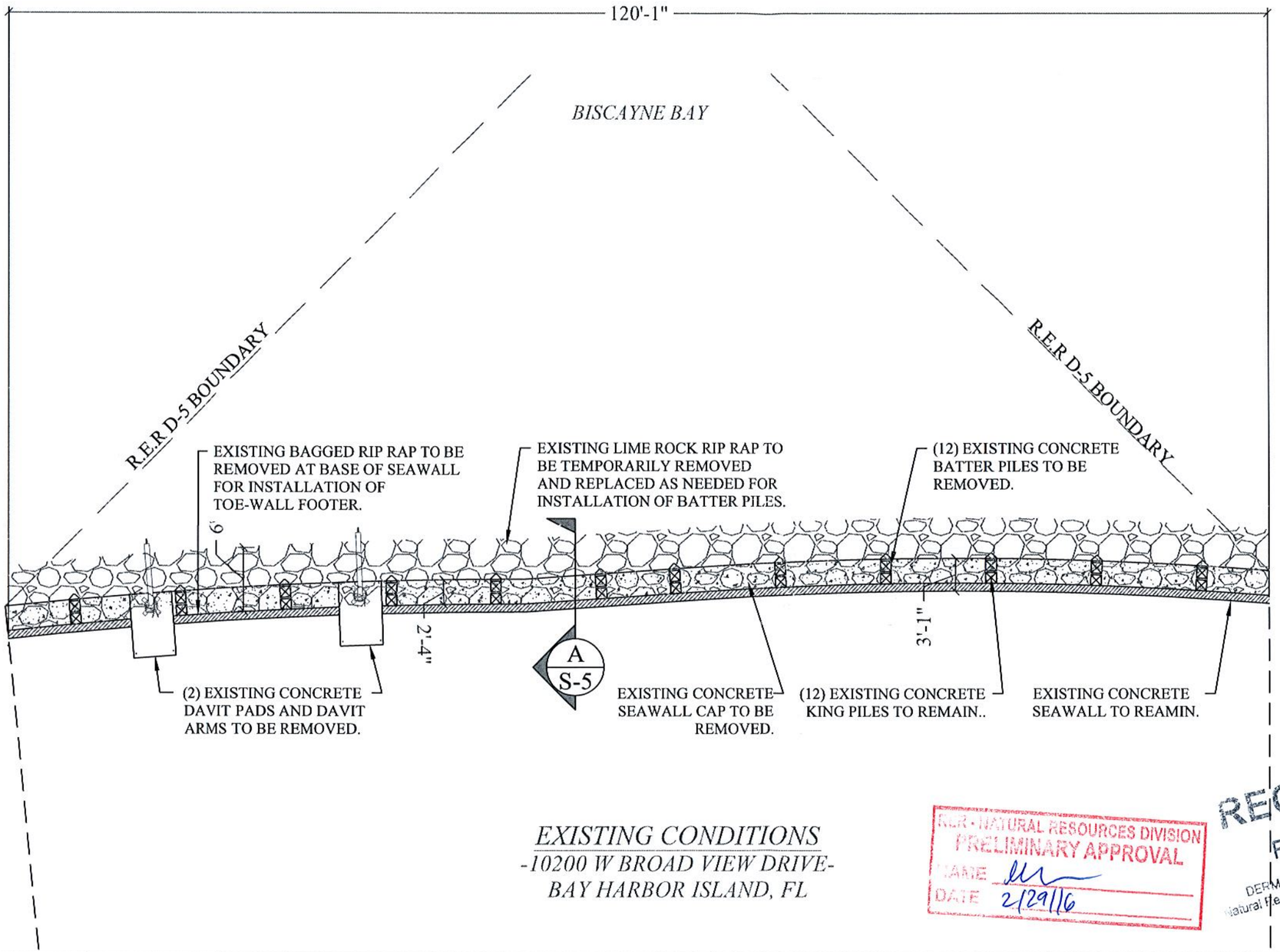

EXISTING CONDITIONS
-10200 W BROAD VIEW DRIVE-
BAY HARBOR ISLAND, FL

RER - NATURAL RESOURCES DIVISION
PRELIMINARY APPROVAL
NAME
DATE 2/29/16

RECEIVED
FEB 29 2016
DERM Coastal Resources Section
Natural Resources Regulation & Restoration Division (NRRRD)

N

0 10' 20'

1/32 INCH = 1 FEET

FRANCO
WATERFRONT IMPROVEMENT PROJECT
Bay Harbor Island, Florida

CLIENT:
Ms. ROSANA FRANCO
10200 W Broad View Dr.
Bay Harbor Islands, FL 33154

ENVIRONMENTAL CONSULTANT:
OCEAN CONSULTING, LLC
340 Minorca Avenue, Suite 7
Coral Gables, Florida 33134
Tel: (305) 921-9344
Fax: (305) 677-3254

CONTRACTOR:

PROJECT ENGINEER:
DYNAMIC ENGINEERING SOLUTIONS, INC.
950 N. Federal Highway, Suite 212
Pompano Beach, FL 33062
Tel: (954) 545-1740
Fax: (954) 545-1721

SEAL / SIGNATURE / DATE

2/25/16
John Omslaer
PE 52733, CA 26820

PERMIT DRAWINGS

Issue #	Issue Date
4	November 9, 2015
5	November 13, 2015
6	December 4, 2015
7	February 5, 2016

PROJECT: 14-4650

EXISTING CONDITIONS

SCALE : AS SHOWN
SHEET NO.

S-2

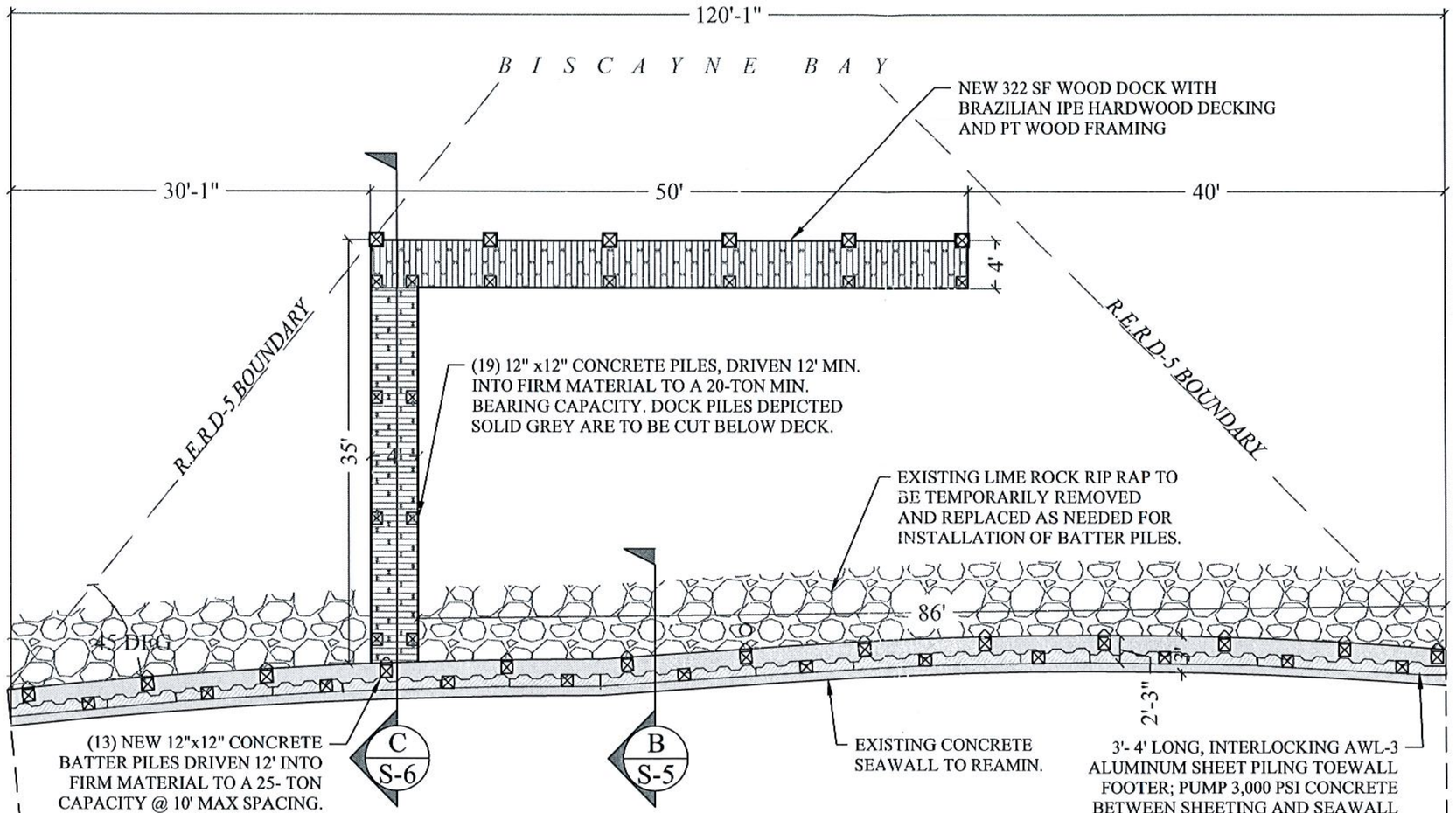

PROPOSED CONDITIONS
-10200 W BROAD VIEW DRIVE-
BAY HARBOR ISLAND, FL

RER - NATURAL RESOURCES DIVISION
PRELIMINARY APPROVAL
NAME
DATE 2/29/16

RECEIVED
FEB 29 2016
DERM Coastal Resources Section
Natural Resources Regulation & Restoration
Division (NRRRD)

N

0 10' 20'

1/32 INCH = 1 FEET

FRANCO
WATERFRONT IMPROVEMENT PROJECT
Bay Harbor Island, Florida

CLIENT:
Ms. ROSANA FRANCO
10200 W Broad View Dr.
Bay Harbor Islands, FL 33154

ENVIRONMENTAL CONSULTANT:
OCEAN CONSULTING, LLC
340 Minorca Avenue, Suite 7
Coral Gables, Florida 33134
Tel: (305) 921-9344
Fax: (305) 677-3254

CONTRACTOR:

PROJECT ENGINEER:
DYNAMIC ENGINEERING SOLUTIONS, INC.
950 N. Federal Highway, Suite 212
Pompano Beach, FL 33062
Tel: (954) 545-1740
Fax: (954) 545-1721

SEAL / SIGNATURE / DATE

John Omslaer
PE 52733, CA 26829

PERMIT DRAWINGS

Issue #	Issue Date
4	November 9, 2015
5	November 13, 2015
6	December 4, 2015
7	February 5, 2016

PROJECT: 14-4650

PROPOSED CONDITIONS

SCALE : AS SHOWN
SHEET NO.
S-3

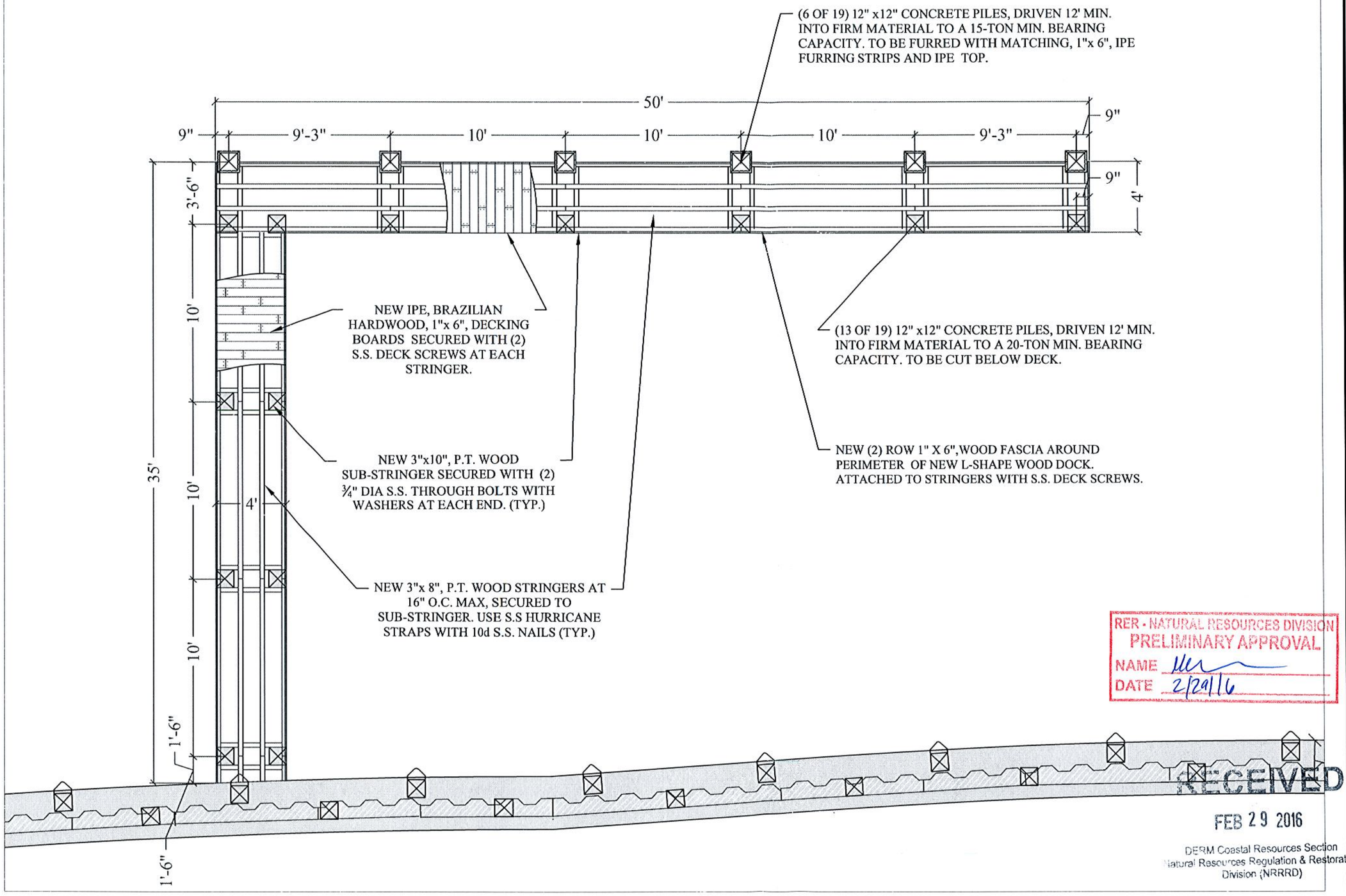

RER - NATURAL RESOURCES DIVISION
PRELIMINARY APPROVAL
NAME
DATE 2/29/16

RECEIVED
FEB 29 2016
DERM Coastal Resources Section
Natural Resources Regulation & Restoration
Division (NRRRD)

DOCK FRAMING PLAN

0 5' 10'
3/16" INCH = 1 FEET

FRANCO
WATERFRONT IMPROVEMENT PROJECT
Bay Harbor Island, Florida

CLIENT:
Ms. ROSANA FRANCO
10200 W Broad View Dr.
Bay Harbor Islands, FL 33154

ENVIRONMENTAL CONSULTANT:
OCEAN CONSULTING, LLC
340 Minorca Avenue, Suite 7
Coral Gables, Florida 33134
Tel: (305) 921-9344
Fax: (305) 677-3254

CONTRACTOR:

PROJECT ENGINEER:
DYNAMIC ENGINEERING SOLUTIONS, INC.
950 N. Federal Highway, Suite 212
Pompano Beach, FL 33062
Tel: (954) 545-1740
Fax: (954) 545-1721

SEAL / SIGNATURE / DATE

John Omslaer
PE 52733, CA 26829

PERMIT DRAWINGS

Issue #	Issue Date
④	November 9, 2015
⑤	November 13, 2015
⑥	December 4, 2015
⑦	February 5, 2016

PROJECT: 14-4650

DOCK FRAMING PLAN

SCALE : AS SHOWN
SHEET NO.
S-4

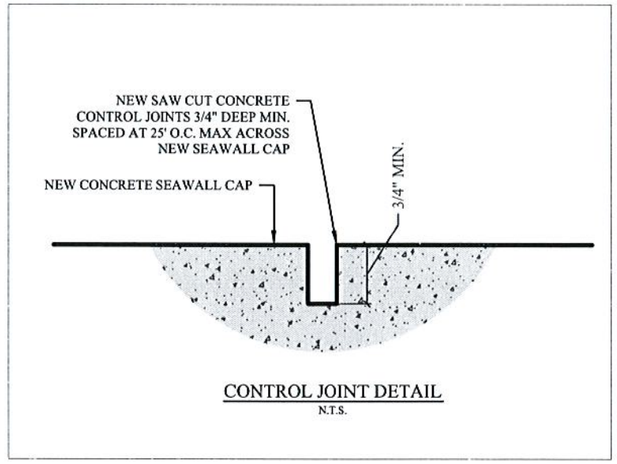

CONTROL JOINT DETAIL
N.T.S.

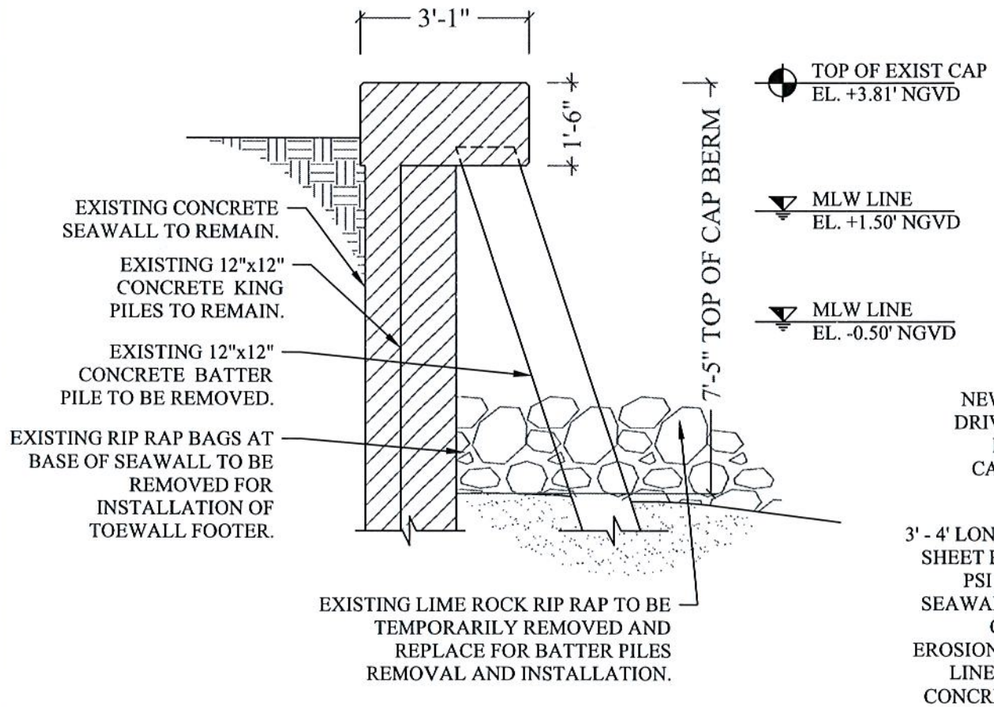

EXISTING SEAWALL SECTION A / S-2
SCALE: ⅜" = 1'-0"

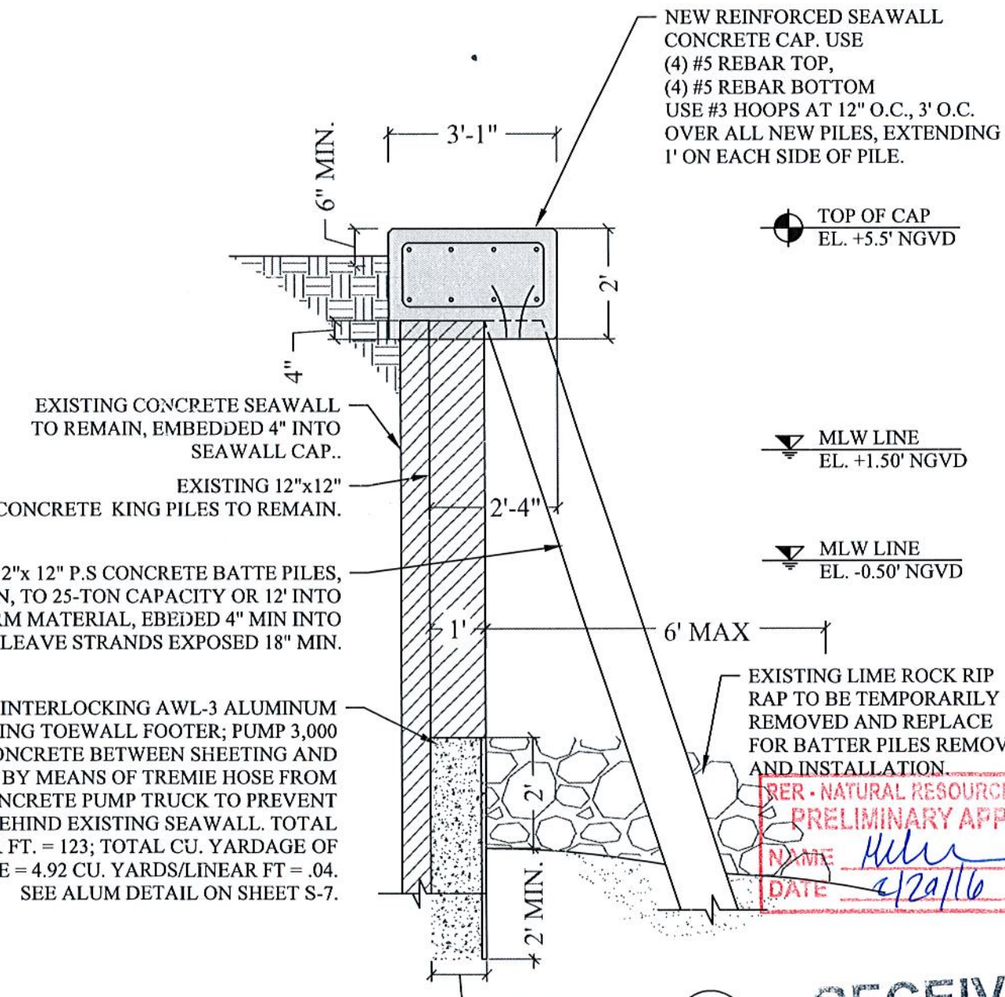

PROPOSED SEAWALL SECTION B / S-3
SCALE: ⅜" = 1'-0"

RECEIVED
FEB 29 2016
DERM Coastal Resources Section
Natural Resources Regulation & Restoration
Division (NRRRD)

DER - NATURAL RESOURCES DIVISION
PRELIMINARY APPROVAL
NAME
DATE 4/29/16

FRANCO
WATERFRONT IMPROVEMENT PROJECT
Bay Harbor Island, Florida

CLIENT:
Ms. ROSANA FRANCO
10200 W Broad View Dr.
Bay Harbor Islands, FL 33154

ENVIRONMENTAL CONSULTANT:
OCEAN CONSULTING, LLC
340 Minorca Avenue, Suite 7
Coral Gables, Florida 33134
Tel: (305) 921-9344
Fax: (305) 677-3254

CONTRACTOR:

PROJECT ENGINEER:
DYNAMIC ENGINEERING SOLUTIONS, INC.
950 N. Federal Highway, Suite 212
Pompano Beach, FL 33062
Tel: (954) 545-1740
Fax: (954) 545-1721

SEAL / SIGNATURE / DATE

4/29/16
John Omslaer
PE 52733, CA 26829

PERMIT DRAWINGS

Issue #	Issue Date
④	November 9, 2015
⑤	November 13, 2015
⑥	December 4, 2015
⑦	February 5, 2016

PROJECT: 14-4650

SEAWALL SECTIONS AND CONTROL JOINT DETAIL
SCALE : AS SHOWN
SHEET NO.
S-5

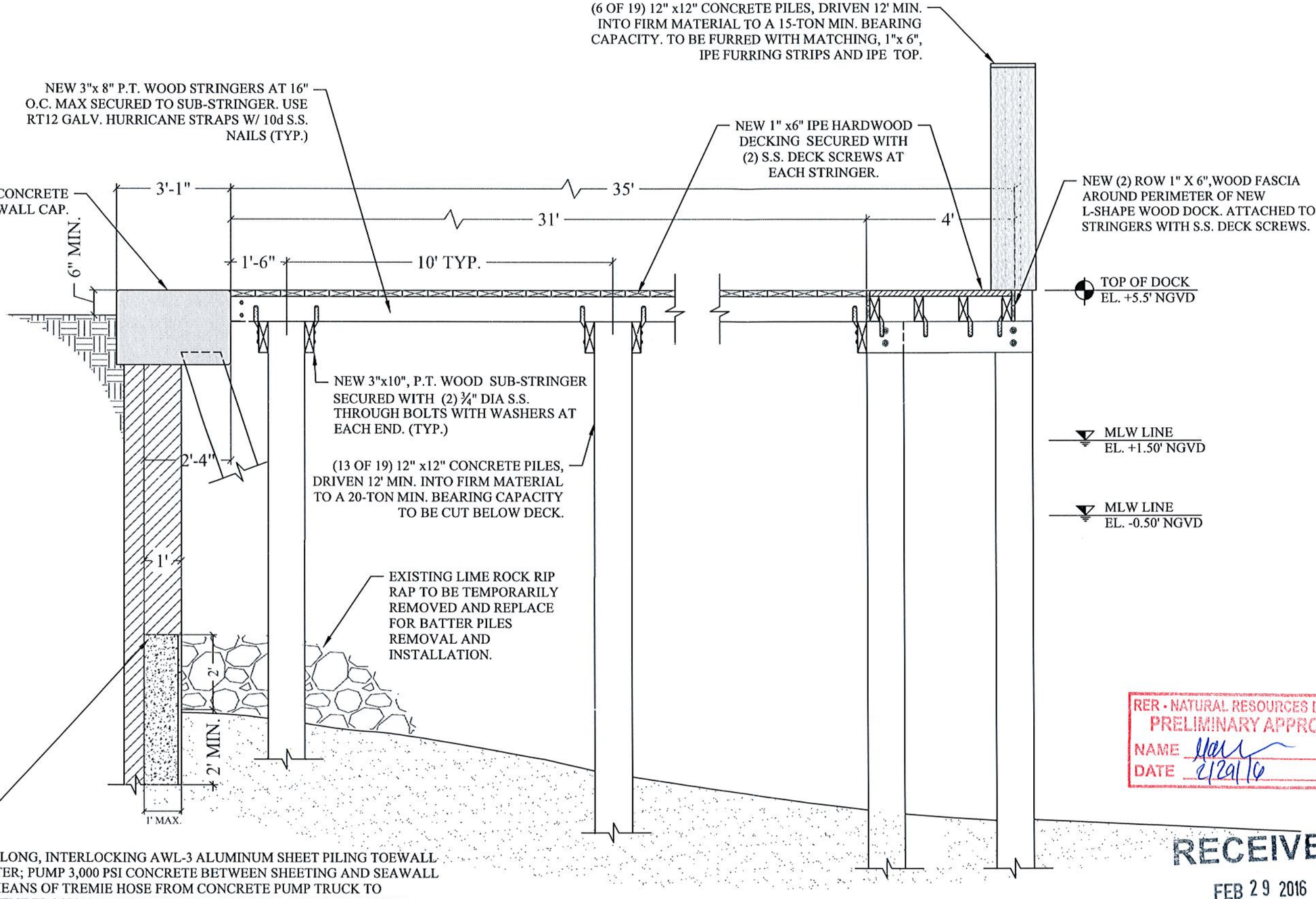

3' - 4' LONG, INTERLOCKING AWL-3 ALUMINUM SHEET PILING TOEWALL FOOTER; PUMP 3,000 PSI CONCRETE BETWEEN SHEETING AND SEAWALL BY MEANS OF TREMIE HOSE FROM CONCRETE PUMP TRUCK TO PREVENT EROSION BEHIND EXISTING SEAWALL. TOTAL LINEAR FT. = 123; TOTAL CU. YARDAGE OF CONCRETE = 4.92 CU. YARDS/LINEAR FT = .04. SEE ALUM DETAIL ON SHEET S-7.

PROPOSED DOCK SECTION C / S-3
SCALE: ½" = 1'-0"

RER - NATURAL RESOURCES DIVISION
PRELIMINARY APPROVAL
NAME
DATE 2/29/16

RECEIVED
FEB 29 2016
DERM Coastal Resources Section
Natural Resources Regulation & Restoration
Division (NRRRD)

FRANCO
WATERFRONT IMPROVEMENT PROJECT
Bay Harbor Island, Florida

CLIENT:
Ms. ROSANA FRANCO
10200 W Broad View Dr.
Bay Harbor Islands, FL 33154

ENVIRONMENTAL CONSULTANT:
OCEAN CONSULTING, LLC
340 Minorca Avenue, Suite 7
Coral Gables, Florida 33134
Tel: (305) 921-9344
Fax: (305) 677-3254

CONTRACTOR:

PROJECT ENGINEER:
DYNAMIC ENGINEERING SOLUTIONS, INC.
950 N. Federal Highway, Suite 212
Pompano Beach, FL 33062
Tel: (954) 545-1740
Fax: (954) 545-1721

SEAL / SIGNATURE / DATE

2/29/16
John Omslaer
PE 52733, CA 26829

PERMIT DRAWINGS

Issue #	Issue Date
④	November 9, 2015
⑤	November 13, 2015
⑥	December 4, 2015
⑦	February 5, 2016

PROJECT: 14-4650

PROPOSED DOCK SECTION
SCALE : AS SHOWN
SHEET NO.
S-6

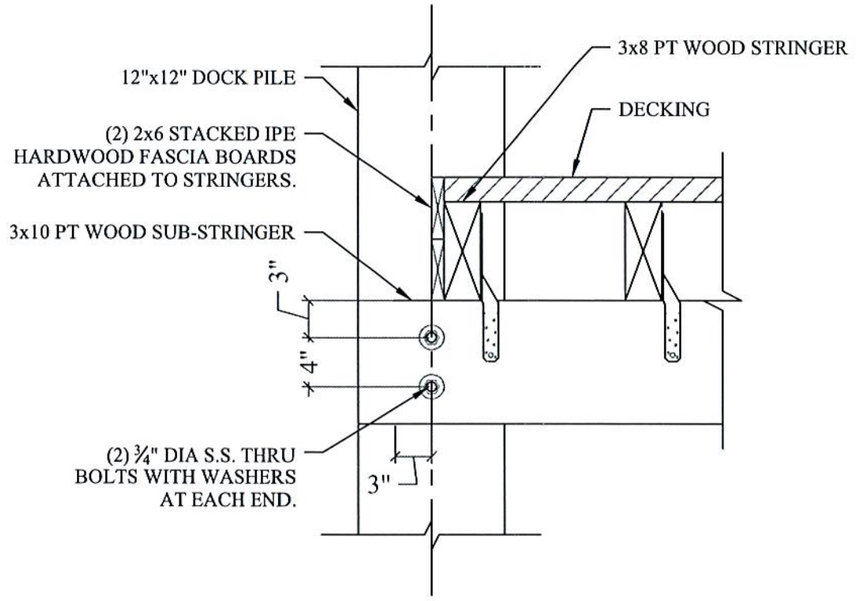

TYPICAL DOCK EDGE DETAIL 1/S-4

SCALE: 1" = 1'-0"

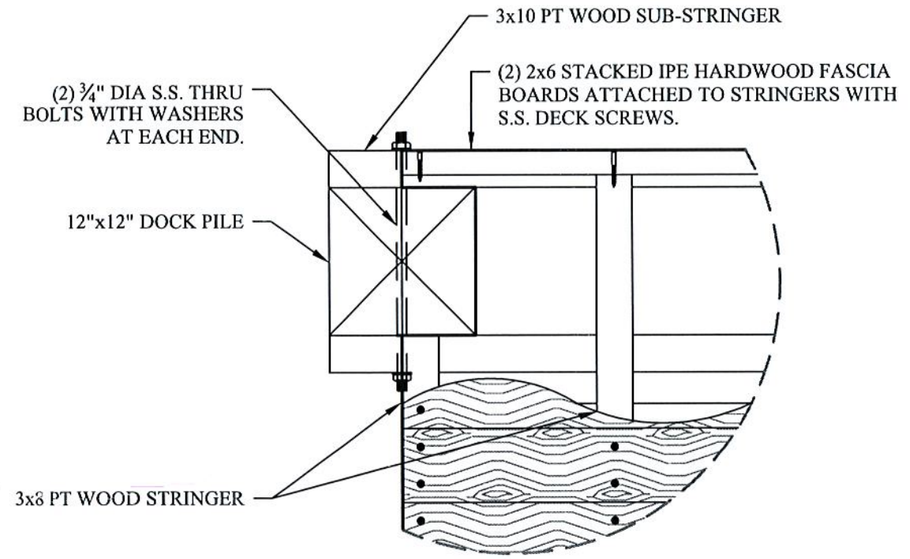

TYPICAL DOCK EDGE PLAN DETAIL 2/S-4

SCALE: 1" = 1'-0"

PILE NOTE:

CONCRETE COMPRESSIVE STRENGTH:
3000 PSI @ RELEASE
5000 PSI @ DRIVING

SPIRAL TO BE ASTM A-82 TIGHT HARD-DRAWN WIRE

STRANDS - USE FOUR 7/16" (270K) LOW RELAXATION ASTM 416-87 UNCOATED 7-WIRE STRANDS TENSIONED TO 2.33 KIPS EACH

1-POINT PICKUP-MAXIMUM L = 50'

2-POINT PICKUP-MAXIMUM L = 62'

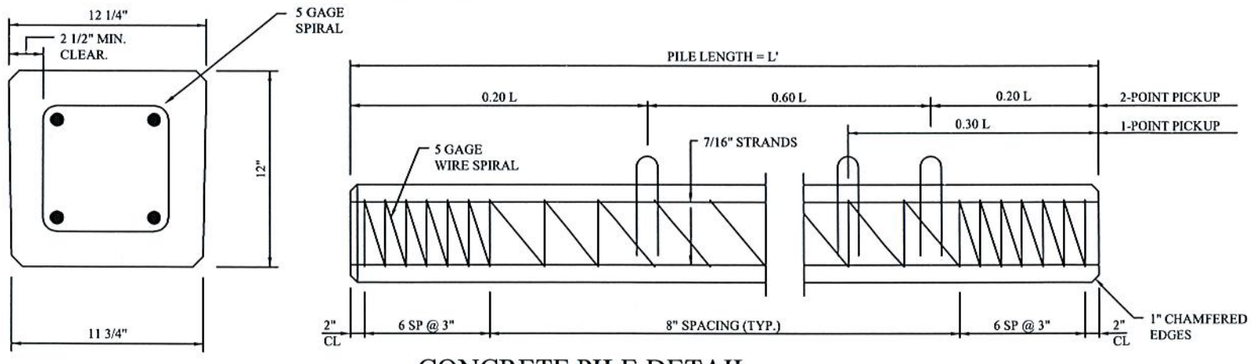

CONCRETE PILE DETAIL

N.T.S.

AWL-3

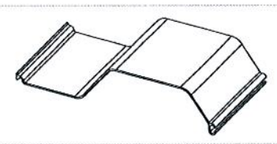

MAX Allowable Moment (M)	1,950 ft-lb/ft	8.67 kN-m/m
Section Modulus (Z)	1.2 in^3/ft	65 cm^3/m
Moment of Inertia (I)	1.5 in^4/ft	205 cm^4/m
Thickness (t)	0.095 in	2.4 mm
Section Depth	2.5 in	64 mm
Section Width	12 in	305 mm
Design Modulus of Elasticity (E)	10 x10^4 psi	68,900 Mpa
Material	6061-T6 Marine Grade Aluminum	
Standard Colors	Mill Finish	
Profile/Patented Features	Pan Profile	

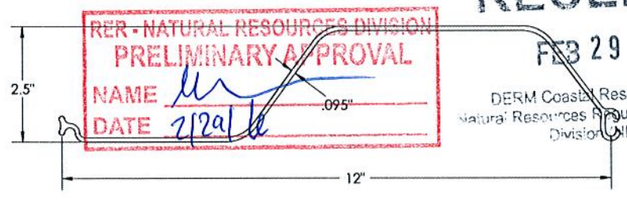

RER - NATURAL RESOURCES DIVISION
PRELIMINARY APPROVAL
NAME
DATE 2/29/16

RECEIVED
FEB 29 2016
DERM Coastal Resources Section
Natural Resources Regulation & Restoration Division (NRRRD)

FRANCO
WATERFRONT IMPROVEMENT PROJECT
Bay Harbor Island, Florida

CLIENT:
Ms. ROSANA FRANCO
10200 W Broad View Dr.
Bay Harbor Islands, FL 33154

ENVIRONMENTAL CONSULTANT:
OCEAN CONSULTING, LLC
340 Minorca Avenue, Suite 7
Coral Gables, Florida 33134
Tel: (305) 921-9344
Fax: (305) 677-3254

CONTRACTOR:

PROJECT ENGINEER:
DYNAMIC ENGINEERING SOLUTIONS, INC.
950 N. Federal Highway, Suite 212
Pompano Beach, FL 33062
Tel: (954) 545-1740
Fax: (954) 545-1721

SEAL / SIGNATURE / DATE

John Omslaer
PE 52733, CA 26829

PERMIT DRAWINGS

Issue #	Issue Date
4	November 9, 2015
5	November 13, 2015
6	December 4, 2015
7	February 5, 2016

PROJECT: 14-4650

DETAILS AND SPECIFACTIONS

SCALE : AS SHOWN

SHEET NO.

S-7

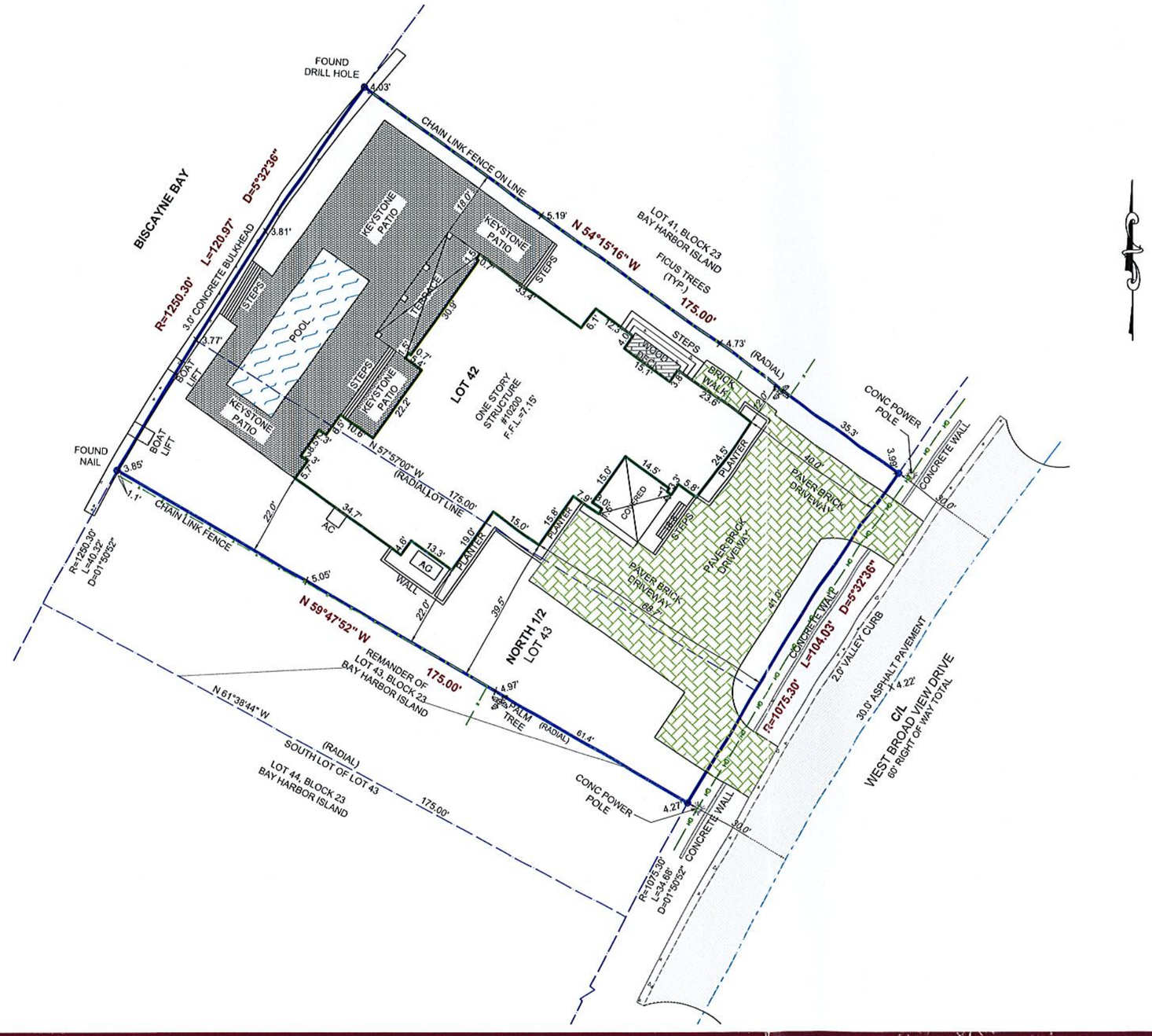

LEGAL DESCRIPTION:

LOT 42 & THE NORTH ½ OF LOT 43, BLOCK 23, OF "BAY HARBOR ISLAND" ACCORDING TO THE PLAT THEREOF, AS RECORDED IN PLAT BOOK 46, PAGE 5 OF THE PUBLIC RECORDS OF MIAMI-DADE COUNTY, FLORIDA.

Surveyor's Notes

1. **Bearing Reference:** The bearings shown hereon are referenced to the recorded plat.
2. Legal description provided by client.
3. No attempt was made to locate any underground utilities, except as shown.
4. The information shown hereon is for the purpose to obtain permit and/or construction
5. The dimensions shown hereon have an estimated horizontal positional accuracy of 0.10 feet.
6. This survey is not valid without the signature and original raised seal of a Florida licensed Surveyor and Mapper.
7. This survey was prepared without benefit of a title commitment. There may be additional matters of record, not shown, which can be found in the Public Records of the corresponding county noted hereon.
8. ***Benchmark Reference:*** Miami-Dade County Benchmark Elevation = 4.22
9. The elevations shown hereon are referenced to the National Geodetic Vertical Datum of 1929 (NGVD 1929).

CERTIFICATIONS:

MARK TABACINIC

GENERAL LEGEND:

BCR	= BROWARD COUNTY RECORDS	ORB	= OFFICIAL RECORDS BOOK
BM	= BENCHMARK	PB	= PLAT BOOK
C/L	= CENTERLINE	PBCR	= PALM BEACH RECORDS
CLF	= CHAINLINK FENCE	PCP	= FOUND NAIL AND CAP
CBS	= CONCRETE BLOCK STRUCTURE	PG	= PAGE
CONC	= CONCRETE	POB	= POINT OF BEGINNING
DE	= DRAINAGE EASEMENT	POC	= POINT OF COMMENCEMENT
D	= DELTA (CENTRAL ANGLE)	PVCF	= PLASTIC FENCE
ELEV.	= ELEVATION	R	= RADIUS
X 0.00'	= EXISTING ELEVATION	R/W	= RIGHT OF WAY
EOW	= EDGE OF WATER	S/W	= SIDEWALK
FF	= FINISHED FLOOR	SIR	= SET ½" IRON ROD
FN	= FOUND NAIL	SND	= SET NAIL & DISC
INV	= INVERT	UE	= UTILITY EASEMENT
FIP	= FOUND IRON PIPE	W/F	= WOOD FENCE
FIR	= FOUND IRON ROD	W/M	= WATER METER
FND	= FOUND NAIL AND DISC		
L	= ARC LENGTH		
MDCR	= MIAMI DADE COUNTY RECORDS		
N/D	= NAIL AND DISC		

Boundary Survey

PROPERTY ADDRESS:
10200 W. BROADVIEW DRIVE
BAL HARBOR, FL. 33154
PORT ST. LUCIE, FL. 34953

FLOOD DATA:
ZONE: AE 8
COMMUNITY NUMBER: 120537
PANEL & SUFFIX: 0144 L
DATE OF FIRM: 9/11/2009
FF ELEV = 7.15

DATE:	REVISIONS:
10/14/2014	FIELD LOCATION OF IMPROVEMENTS
12/02/2014	PARTIAL TOPOGRAPHIC SURVEY
01/13/2015	LOCATED OVER HEAD LINES

SCALE: 1" = 30'
CADD: LJ
QA / QC: DG
INVOICE NO. 15-41231
SHEET NO. 1 of 1

JULIO S. PITA
PROFESSIONAL SURVEYOR AND MAPPER
NO. L.S. 5789 STATE OF FLORIDA

DATE: 10/14/2014

ALL COUNTY SURVEYORS
PROFESSIONAL SURVEYORS AND MAPPERS
LICENSE NO. 6677
OFFICE: (954) 777-4747
FAX: (954) 777-2707
5400 SOUTH UNIVERSITY DRIVE
DAVIE, FLORIDA 33328 SUITE 216

MICHAEL MILLER PLANNING ASSOCIATES, INC.
Land Design Municipal Planning Services Transportation Planning

TOWN OF BAY HARBOR ISLANDS
COMMUNITY DEVELOPMENT
MEMORANDUM

To: Mayor and Town Councilmembers
Town of Bay Harbor Islands

CC: Ron Wasson, Town Manager
Marlene Siegel, Town Clerk

From: Michael J. Miller, AICP
Consultant Town Planner

Date: May 24th, 2016

Subject: Zoning Variance Application – Boat Dock
Mark Tabacinic & Vanessa Bibliowicz
10200 W. Broadview Drive
Legal Description: Lot 42 & N ½ of Lot 43 / Block 23
MMPA Project No.: 01-0702-1004

ISSUE

The owner / applicant is requesting a variance from the Town Code in order to construct a boat dock that projects further out into Biscayne Bay (10 feet) than the Town Code now allows. The current Code provisions limit docks to 4 feet in width for any portion extending more than 8 feet beyond the seawall cap in this area. Further, the current Code provisions limit boat docks from extending more than 25 feet beyond the seawall cap. The applicant is seeking permission to construct a dock that extends seaward of the seawall 35'-0" due to Miami-Dade County requirements related to the water depth / seagrasses. Sec. 23-12(6)(a)(x) of the Town's Code allows for variances to be requested based on Miami-Dade County's environmental review.

SPECIFIC VARIANCE REQUEST

The applicant is seeking permission to construct an "L"-shaped boat dock, four (4) feet in width, which extends 35 feet seaward from the seawall cap. The portion of the boat dock running parallel to the seawall is 50 feet in length. As stated above, the Code allows for boat docks to project out further than the base limitations, if Miami-Dade County requires alterations to the above limitation, based on underwater conditions, such as depth of the water, existing sea-grass, etc. In this instance, an action by the applicant is not causing the hardship.

Following is a summary of the applicable Code provisions:

- Variance from Section 23-12(6)(a)(iii) limiting docks from extending more than 25 feet beyond the outside face of the seawall cap;

- Complying with Section 23-12(6)(a)(x) allowing for further projections, through the use of a variance granted by the Town Council, if Miami-Dade County requires alterations to the above limitations. Approval shall be limited to the minimal variation of the criteria necessary to meet the unique environmental characteristics of the site.

BACKGROUND

The Town has had land development regulations governing seawalls, docks, mooring piles and related structures for many years. A major Code analysis / rewrite was performed in late 2007. Former Mayor Peter Lynch, a professional boat captain, led efforts to update the Code provisions to include modern standards. Another study effort / Code update was undertaken in 2009-10 due primarily to address seawall heights but was never adopted. However, in November 2013 the Town Council finally amended this section of the Code to address the heights of future seawalls and again revised some of the regulations for docks, particularly to address the Miami-Dade County restrictions caused by shallow water / environmental issues. Currently the Town is again studying the seawall / dock requirements for potential amendments.

The subject single-family home is currently under construction and was approved by the Planning and Zoning Board on April 7th, 2015. The survey submitted (January 2015) indicates that currently, no dock exists – only boat lift davits. MMPA notes that most existing docks in this area run immediately adjacent to the seawall.

The application package submitted included a Town variance application form, a property survey and a site plan / dock plan showing the location of the proposed dock designed by the project engineer (Dynamic Engineering Solutions, Inc.). The applicant also included a letter from Miami-Dade County, stating a recommended design is required in order to meet the minimum required water depth. The proposed plans appear follow the County's recommended design.

ANALYSIS

As per the Town's request, MMPA has completed our review of the variance application and provide the following analysis and comments.

The subject property is located on the northwestern side of the West Island facing Biscayne Bay. Per the Town Zoning Code boat docks are limited to 4 feet in width for portions extending more than 8 feet beyond the outside face of the seawall cap. Also, the Code limits docks from extending out more than 25 feet from the seawall, unless Miami-Dade County requires alterations to the above limitation. In which case, the Town Council can grant a variance that is limited to the minimal variation of the stated criteria necessary to meet the unique environmental characteristics of the site.

The permit letter from Miami-Dade County staff states that shallow water depths exist adjacent to this property and the required water depth to moor a vessel cannot be met. Therefore, Miami-Dade County recommended a dimension from the seawall (35 feet), which the proposed boat dock reflects. Miami-Dade County has preliminarily approved the proposed boat dock design, subject to the Town's approval.

MMPA notes that the design shows an "L"-shaped dock that is four (4) feet in width. The proposed boat dock extends 35 feet out from the seawall cap and then runs parallel to the seawall for a length of 50 feet. Section 23-12(6)(a)(iii) of the Town Code limits boat docks from extending out more than 25 feet beyond the outside face of the seawall cap, unless Miami-Dade County requests a variation due to water depth or environmental reasons. MMPA believes that a variance for the boat lift location is justifiable, as an action by the applicant is not causing the hardship.

Additionally, MMPA notes that the survey / plan show the existing seawall height between 3.77 to 4.03 feet NGVD. The proposed plans indicate the seawall will be raised to the minimum required height of 5.5 feet; the Town Code encourages seawall heights along Biscayne Bay up to 6.0 feet in elevation for this area of the Town due to wave action from boat traffic. The top of the new boat dock will match the proposed seawall cap elevation.

CONCLUSION AND RECOMMENDATION

Based on the above analysis, MMPA recommends that the Town Council **APPROVE** the requested variances to allow the "L" shaped boat dock as proposed.